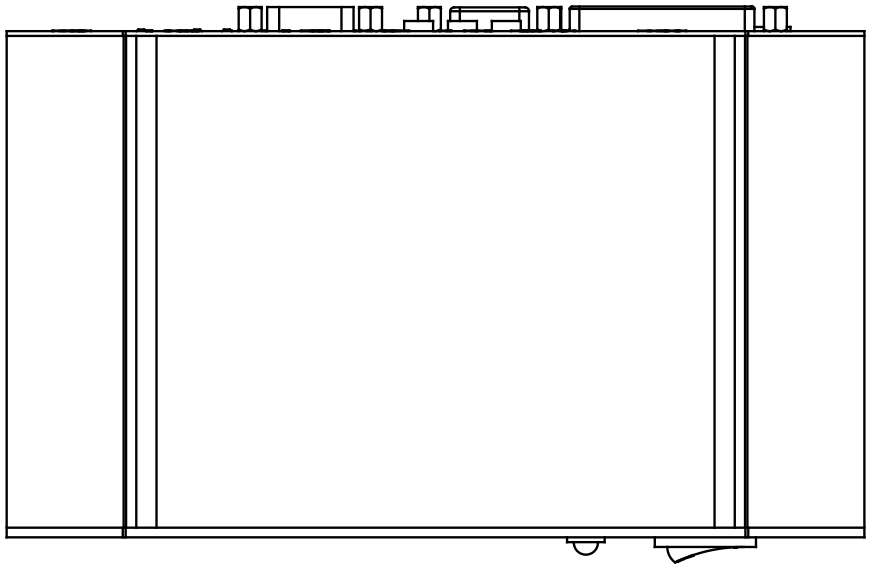

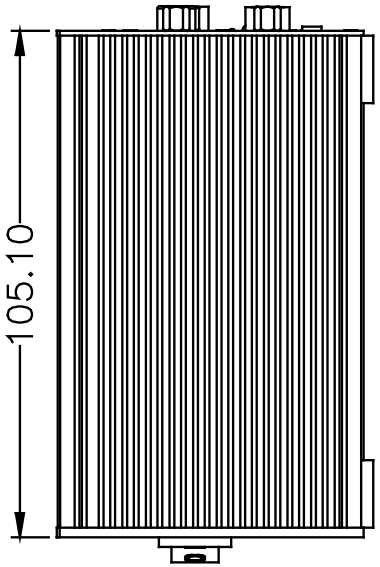
105.10

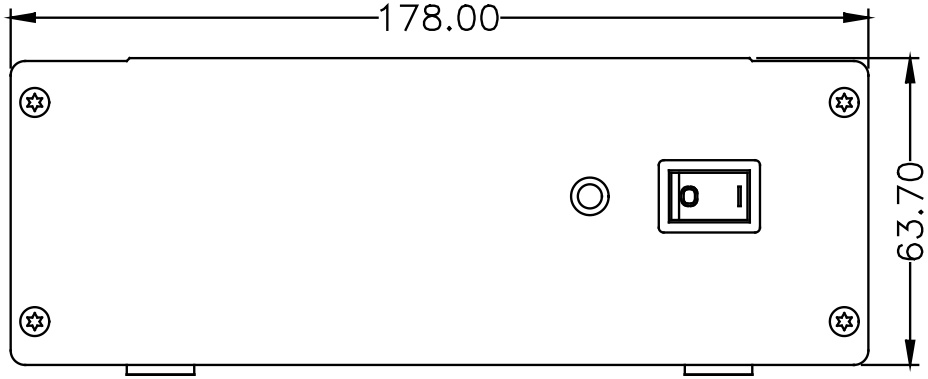
178.00
63.70

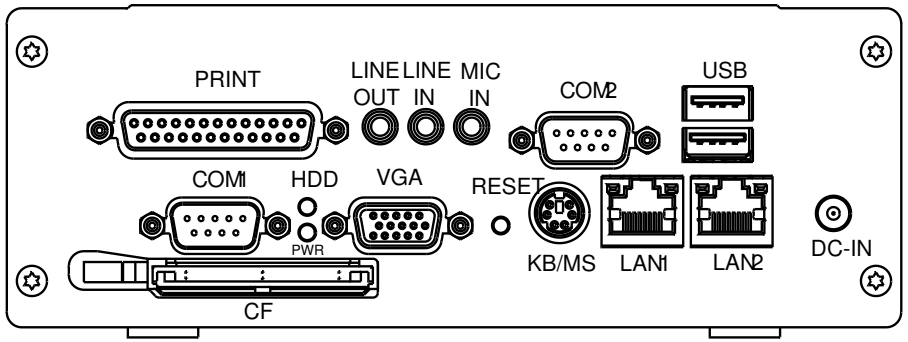
PRINT
LINE OUT
LINE IN
MIC IN
COM2
USB
COM1
HDD
PWR
VGA
RESET
KB/MS
LAN1
LAN2
DC-IN
CF