the standard in safety

Underwriters Laboratories

File E320761 Vol X1 Issued: 2008-08-20
Revised: 2008-08-21

FOLLOW-UP SERVICE PROCEDURE
(TYPE R)

MEDICAL EQUIPMENT
(PIDF,PIDF7)

Manufacturer: SEE ADDENDUM FOR MANUFACTURER LOCATIONS

Applicant: (100235-280)
AVALUE TECHNOLOGY INC
7TH FL 228 LIAN CHENG RD
CHUNG HO
TAIPEI HSIEN
235 TAIWAN

Classified Company: (100235-280)
SAME AS APPLICANT

This Procedure authorizes the above manufacturer to use the marking specified by Underwriters Laboratories Inc.(UL), or any authorized licensee of UL, only on products covered by this Procedure, in accordance with the applicable UL Services Agreement.

The prescribed Mark or Marking shall be used only at the above manufacturing location on such products which comply with this Procedure and any other applicable requirements.

The Procedure contains information for the use of the above named Manufacturer and representatives of Underwriters Laboratories Inc. and is not to be used for any other purpose. It is lent to the Manufacturer with the understanding that it is not to be copied, either wholly or in part, and that it will be returned to Underwriters Laboratories Inc. (UL) or any authorized licensee of UL, upon request.

This PROCEDURE, and any subsequent revision, is the property of Underwriters Laboratories Inc.(UL) and the authorized licensee of UL and is not transferable.

Underwriters Laboratories Inc.

Stephen Hewson
Senior Vice President
Global Follow-Up Service Operations

William R. Carney
Director
North American Certification Program

LOCATION

(100219-579) YING YI ELECTRONICS CO LTD
6 ALLEY 60 LANE 507
CHUENG-SHAN RD
TAOYUAN
330 TAIWAN

Factory ID: --

Index

Product Type	Model/Type Reference	Report Reference #
Panel PC	MTP-12XX (X can be number 0 through 9 , a - z , A - Z or Blank. Differences are for business purpose only, not related to safety issue)	E320761-A1-UL-1

File		Volume	Page	Date:
E320761	Index	X1	2	22-Aug-08

GENERIC INSPECTION INSTRUCTIONS

Product Category	Product Category CCN
Power Supplies for Use in Health Care Facilities	KFCG, KFCG7
Medical Equipment	PIDF, PIDF2, PIDF7, PIDF8
Medical Equipment Classified in Accordance with IEC Publications	PIGR
Medical Equipment Classified in Accordance with Specified Standards	PIKF
Medical and Dental Equipment, Professional, Nonelectric	PIPG
Power Supplies, Medical and Dental - Component	QQHM2, QQHM8

These instructions consist of the following Parts:

Part	Description
AA	Instructions and Duties for UL Representative
AB	Instructions for Follow-Up Tests at UL
AC	Responsibilities and Requirements for Manufacturer
AD	General Terminology
AE	General Product Construction Requirements
AF	UL Certification Marks

Copyright © 2002 Underwriters Laboratories Inc

PART AA

INSTRUCTIONS AND DUTIES FOR UL REPRESENTATIVE

AA1.0	**UL REPRESENTATIVE'S DUTIES**
AA1.1	The UL Representative's duties include, but are not limited to: A. Examining the construction of production intended to bear the UL Mark or Marking to determine compliance with the description of the product and any other requirements expressed in this Procedure. B. Where so specified in each Test Report, forwarding samples to UL for Follow-Up tests C. Where so specified by Part AC, inspecting the test records and facilities of the manufacturer to ensure that: 1. The proper number of samples are undergoing the required tests, and 2. The required tests are being performed correctly, and 3. The proper information is being recorded and is up-to-date, and 4. The instruments being used for the tests have been calibrated at the prescribed interval and are in good working order.

AA2.0	**PROCEDURE IN CASE OF NONCONFORMANCE**
AA2.1	Report to the manufacturer and Underwriters Laboratories Inc. by means of a Variation Notice (VN) if: A. Variations in construction are found, or B. The manufacturer's method and/or frequency of testing is not as described, or C. The test records maintained by the manufacturer are not as described, or D. The manufacturer's inspection program is not being performed as described, or E. Nonconforming test results are witnessed during tests conducted specifically for the UL Representative.
AA2.2	Explain to the manufacturer that a VN is a means of communication with the manufacturer and applicant and forms a record of those items where nonconformance to the Procedure has been found. Reference is to be made to "Information for Manufacturer's Variation Notices" on the back of the VN.
AA2.3	When a product does not conform with the Procedure, require that the manufacturer: A. Remove any markings referencing UL from the product, or obliterate these markings where the marking is imprinted, die-stamped, molded, etc., or B. Suitably modify all products that do not comply with the Procedure, or C. Hold shipment pending further instructions from Underwriters Laboratories Inc. D. Demonstrate that one of the conditions shown below exist and be able to provide any of the referenced information or documentation. Under the following conditions, variations from Procedure described constructions shall be noted on a Variation Notice, however, the manufacturer is not required to remove UL markings, rework the product or hold shipment. 1. A part is called out as Listed and the manufacturer or part number is not as described and the alternate part being used is Listed and all other attributes for the part are met. 2. A part is called out as a Recognized Component (R/C) and the manufacturer or part number is not as described and the alternate part being used is Recognized under the described category and all other attributes for the part are met.

	3. Internal wiring is identified by UL Style Number and the manufacturer is using (R/C) Appliance Wiring Material (AWM) with Style Numbers not referenced in the Procedure description. The manufacturer must be able to provide documentation that the voltage and temperature ratings of the alternate Style Number are equal to or greater than the ratings of the Style Numbers specified in the Procedure. AWM with Style Numbers not specified in the Procedure must be rated VW-1.
AA2.4	It is the manufacturer's responsibility to forward a copy of the Variation Notice to the Applicant.
AA2.5	If the manufacturer and Applicant question the rejection of the product, the material may be held at the point of inspection, typically at the factory, pending an appeal. The manufacturer has the right to appeal a decision with which they disagree. Provide the name of the UL engineer to whom the appeal is to be made. To resolve issues involving variations in construction, the manufacturer and Applicant may also be offered the option of contacting their New Work assignment engineer. Held shipment appeals involving Follow-Up Services issues (e.g. -improper labeling, etc.) should be directed to an appropriate staff member designated by the Reviewing Office, such as the Responsible Reviewing Office Personnel (RROP) for the product category. Should UL grant temporary authorization for the continued use of the UL Mark, such temporary authorization shall only be for the time needed to review and/or process the Procedure revisions, or as otherwise specified to cover a particular lot or production run. The manufacturer shall satisfy the UL Representative that all marks referencing UL are removed from the rejected material. Those marks referencing UL not destroyed during their removal from the product shall be turned over to the UL Representative for destruction.

AA3.0	**EXAMINATIONS TO BE WITNESSED BY UL REPRESENTATIVE**
AA3.1	**Inspection of Printed Wiring Boards and Printed Wiring Board Assemblies**
AA3.1.1	The UL Representative shall determine that the printed wiring board is as specified in the Procedure.
AA3.1.2	If the soldering operation is performed at the Original Equipment Manufacturer's factory (OEM) and the soldering temperature and dwell time are given in the Procedure, the temperature and dwell time shall also be checked to determine that they do not exceed the limits specified.
AA3.1.3	The UL Representative shall determine that the printed wiring board is as specified in the Procedure. The UL Representative then shall make a visual inspection of the printed wiring board assemblies for any mechanical damage or evidence of exposure to excessive temperatures that may have occurred during the soldering operation. The base material and the conductors shall be examined for nonconforming features as indicated below: A. Conductors, Terminal Pads, and Tabs 1. Reduction in cross-section, such as scratches, nicks, pin holes, tearing. 2. Loosening or lifting of printed wiring conductor, pad, or tab from the base material. 3. Sections missing or damaged. 4. Blistering 5. Breaks B. Base Material 1. Warping 2. Cracking 3. Charring, blistering, or other heat damage due to solder process 4. Delamination

AA3.1.4	Samples shall be selected at random as shown in Table AA1 in accordance with the size of the incoming lot. The lot is to be rejected in accordance with the fifth column of the table.
AA3.1.5	With respect to printed wiring boards using Surface Mounted Technology (SMT), if the SMT assembly process is done at temperatures and times below the soldering limits, the UL Representative will accept the boards. If the assembly process is conducted on-site with temperatures/times in excess of soldering limits or if the process is conducted off-site and the temperatures/times cannot be verified, a visual inspection will be conducted by the UL Representative in accordance with the guidelines shown above. If any instructions for SMT components are specified in the Procedure, then these SMT instructions are superseded.

TABLE AA1
PRINTED WIRING BOARD SAMPLE SELECTION

Size of incoming lot# for each type##	Initial number of samples taken	Number of nonconforming samples requiring additional samples	Additional number of samples to retest lot	Cumulative number of nonconforming samples to reject lot
1 - 500	8	1	13	2
501 – 3200	13	1	20	2
3201 - 35000	20	1	32	2
Above 35000	32	1	50	2

Notes:

A lot is considered to comprise all printed wiring board assemblies of the same type at the manufacturer's factory at the time of the UL Representative's visit, which have not been previously checked by the UL Representative.

A type is considered a printed wiring board assembly meeting all the following:

1. Same vendor who mounts and solders the components.
2. Same board manufacturer and type or catalog number.
3. Same size
4. Same pattern
5. Same components

AA4.0	**SAMPLE SELECTION FOR TESTS CONDUCTED AT MANUFACTURER AND UL**
AA4.1	**Standard Follow-Up Tests for Plastic Enclosures and Parts**
AA4.1.1	Each Test Report indicates the plastics enclosures or parts that may require Follow-Up Service testing. The UL Representative shall consult Table AA2 to determine which tests are required.
AA4.1.2	With respect to Table AA2, Access to Molding Operation shall be determined in accordance with the following: A. UL is considered to have access to the plastic molding operation if the molding takes place in the end-product assembly location and the operation complies with the requirements below. B. The UL Representative shall have free, unannounced, and immediate access to the factory and the storage facility during all business hours of the factory or storage facility. The UL Representative shall also have access to the records required below. C. The manufacturer shall mark each enclosure, cartons containing enclosures, or a tag accompanying the enclosure in a manner such that the UL Representative can trace the origin of each enclosure to a specific batch. D. The manufacturer shall keep records for each batch of plastic enclosures molded, in accordance with the below requirements. E. The records shall be thorough, so that the UL Representative may determine the composition of the enclosure. The records shall be maintained for at least six months from the date of production, and shall be accurate. All of the following items are to be covered: 1. The records shall indicate the base material. The manufacturer may not blend resins. *Exception: The manufacturer may blend resins provided it is specifically stated in the Procedure.* 2. The records shall include the amount of regrind used. Thermoplastic regrind shall not exceed 25 percent by weight. UL does not authorize the use of thermoset regrind. *Exception: Thermoplastic regrind may exceed 25 percent provided it is specifically stated in the Procedure and does not exceed the percent stated in the Procedure.* 3. The composition of the enclosures shall not include recycled plastics, color concentrates, flame retardants, or mold release lubricants. *Exception: One or more of the elements indicated in 3) may be included, provided the Procedure specifically acknowledges its use.* F. However, if a minor discrepancy (such as a mathematical error or a bookkeeping oversight) occurs, the manufacturer shall discuss the error with the responsible individual. If necessary, the manufacturer shall correct the error on the records. To prevent recurrence of the error, the error shall be documented on a Variation Notice, and the UL Representative shall pay particular attention to this area during future inspections. G. If a major discrepancy appears in the records, or if the records are not complete, or UL no longer has access to the molding operation, the UL Representative shall issue a Variation Notice so that the Procedure will be modified accordingly
AA4.1.3	Where testing is required, samples are to be selected no less than once per year in accordance with each Test Report. All samples are to be handled in accordance with the requirements of this section.
AA4.1.4	Enclosure samples shall be chosen in a manner such that each enclosure material in use by the manufacturer is represented by tests no less than once over a two-year period. Enclosure materials that are used infrequently (i.e. less than once in a two year period) shall be selected whenever they are used.

TABLE AA2
FOLLOW-UP TESTING FOR PLASTIC ENCLOSURES AND PARTS

Enclosure plastic	Molding location		
	Recognized Component molder or evaluated component molder other than Recognized [a]	Not evaluated molding	
		UL has access to molding operation [b]	UL does not have access to molding operation [b]
Recognized Component	No tests required	Annual Impact Test at Mfg. OR Annual ID Tests at UL [c, d]	Annual Impact and ID Tests at UL
Unlisted Component [e]	Annual Impact Test at Mfg. [d] AND Annual ID and Flame Tests at UL	Annual Impact Test at Mfg. [d] AND Annual ID and Flame Tests at UL	Bi-annual Impact and ID Tests at UL

[a] The reference to evaluated component molder other than Recognized is in regard to a molder of plastic fabricated parts which has been authorized by UL to mold plastic for the end-use product, but for which no Recognition has been established.

[b] Access to molding operation means the molding takes place in the end-product assembly location and the manufacturer follows the requirements in AA4.1.2.

[c] The manufacturer may elect either an Impact Test or ID Tests. The UL Representative shall act accordingly.

[d] If the manufacturer does not have the ability to perform the Impact Test in accordance with AA4.1.5, the required test samples are to be forwarded to UL for testing.

[e] The reference to Unlisted component plastic is in regard to a component plastic used in a Listed or Recognized product which is separately investigated in accordance with applicable requirements for the end-use product, and for which no coverage has been requested or established.

AA4.1.5	**Impact Test at Manufacturer**
AA4.1.5.1	Where indicated in Table AA2, the UL Representative shall conduct the Impact Test as part of the product inspection at the manufacturer's facility and shall determine if the manufacturer records the test data in compliance with the requirements of this document *Exception: As noted in Table AA2 footnote (d), the Impact Test shall be conducted at UL if the manufacturer does not have the ability to conduct the test.*
AA4.1.5.2	Each enclosure sample fabricated with the material specified in the Test Report shall be subjected to a single impact. The impact shall be directed onto the surface most likely to demonstrate a nonconformance when the Basis of Acceptability of AA4.1.5.3 is applied. The impact is to be produced by dropping a steel sphere 2 inches (50.8 mm) in diameter and weighing 1.18 pounds (0.536 kg mass) a height of 50.85 in. (129.2 cm). For surfaces other than the top of an enclosure the steel sphere is to be suspended by a cord and swung as a pendulum, dropping through the 50.85 in. (129.2 cm) vertical distance before striking the surface
AA4.1.5.3	Each sample shall withstand the impact of AA4.1.5.2 without being affected to the extent that: A. Uninsulated, live parts are accessible to contact, or B. The mechanical performance of the product is adversely affected so as to create a risk of injury to persons, or C. A condition is produced that can cause a risk of electric shock.
AA4.1.5.4	To determine compliance with AA4.1.5.3 (A), the UL Representative shall apply the articulate probe to verify that the probe cannot contact an uninsulated, live part. It is the manufacturer's responsibility to order and purchase the probe through UL's Corporate Standards Department, at the Northbrook Office.
AA4.1.5.5	To determine compliance with AA4.1.5.3 (B), the UL Representative shall give consideration to the functioning of safety devices and constructional features (such as thermostats, overload protective devices and strain relief). Cracking or denting of the enclosure shall not result in the exposure of moving parts that could cause a risk of injury to persons.
AA4.1.5.6	To determine compliance with AA4.1.5.3 (C), the product shall be subjected to a Dielectric Voltage-Withstand Test as described in AC2.3 without dielectric breakdown.
AA4.1.5.7	If the Impact Test sample produces any one of the conditions specified in AA4.1.5.3, the test is to be repeated on three previously untested samples from the same lot. The results are considered acceptable if all three samples comply with the requirements. If a nonconformance occurs on any one of the additional samples, then the lot shall be considered rejected.
AA4.1.6	**ID and Flammability Tests**
AA4.1.6.1	Samples selected in accordance with Tables AA2 and AA3 shall be tagged with all the following information, and the manufacturer shall forward them to the Reviewing Office: A. Material B. Manufacturer C. Model number D. Follow-Up Test(s) required E. Test parameters (if any)

AA4.2	**Standard Follow-Up Tests for Plastic Enclosures and Parts (Abnormal Operation, Mold Stress Relief Distortion and HB Flammability)**
AA4.2.1	Where specified by a Test Report, samples are to be collected once per year for these tests. All samples shall be tagged with all the following information, and the manufacturer shall forward them to the Reviewing Office: A. Material B. Manufacturer C. Model number D. Follow-Up Test(s) required E. Test parameters (if any)

PART AB

INSTRUCTIONS FOR FOLLOW-UP TESTS AT UL

AB1.0	**GENERAL**
AB1.1	The samples forwarded by the UL Representative shall be subjected to the tests indicated on the sample tags in accordance with any indicated test specifics (e.g. oven temperature).
AB1.2	Unless otherwise notes, all references are to the Generic Inspection Instructions.

AB1.3	**Abnormal Operation Test**
AB1.3.1	The sample shall be operated under the condition of abnormal operation indicated in the Test Report. During the test, the equipment is to rest on white tissue paper on a softwood surface and operate continuously until the ultimate results have been determined. In most cases, continuous operation for seven hours will be necessary in order to make sure that the ultimate results have been determined.
AB1.3.2	There shall be no ignition of the enclosure material, exposure of live parts, emission of flame or molten metal (except as noted below), nor glowing or flaming of the combustible material upon which the equipment is placed. Warping, shrinkage, expansion or cracking of the thermoplastic material is acceptable. Emission of flame or molten metal that occurs through regular openings provided as a part of the enclosure design and construction (not openings which occur as a result of the performance of this test) are acceptable.

TABLE AB1
TEST PARAMETERS

Test	Method	Basis for Acceptability
Impact	AA4.1.5.2	AA4.1.5.3 – AA4.1.5.7
Identification		
Qualitative Infrared Analysis (IR)	UL 746A	Compare to original spectrum in Test Report
Differential Scanning Calorimetry (DSC)	UL 746A	Compare to original thermogram in Test Report
Thermogravimetry (TGA)	UL 746A	Compare to original thermogram in Test Report
Flammability		
3/4 Inch Flame	UL 746C	UL 746C
5 Inch Flame	UL 746C	UL 746C
Mold Stress-Relief Distortion	UL746C	UL746C
HB Flammability	UL746C	UL746C
Abnormal Operation	AB1.3.1	AB1.3.2

PART AC

RESPONSIBILITIES AND REQUIREMENTS FOR MANUFACTURER

AC1.0	**MANUFACTURER'S RESPONSIBILITIES (INCLUDING BUT NOT LIMITED TO)**
AC1.1	Control of UL Mark - Restrict the use of markings that reference UL (either directly or by use of the name, an abbreviation of it, or the UL symbol or Classification Mark, or indirectly by means of agreed-upon markings that are understood to indicate acceptance by UL) to those products that are found by the manufacturer's own inspection to comply with the Procedure description. Such restrictions apply to packaging, brochures or other means of advertising that reference UL. Use of such markings is further limited by the agreements that have been executed by the subscriber and UL. Markings shall be confined to the locations authorized in these Generic Inspection Instructions or in individual Test Reports.
AC1.2	Access to Factory - During hours in which the factory is in operation, provide the UL Representative with free access to any portion of the premises where the product or components thereof are being fabricated, processed, finished or stored, and to the test area assigned for the UL Representative's use. The UL Representative shall be permitted to inspect and subject to prescribed tests, prior to shipment, any product bearing or intended to bear markings referencing UL.
AC1.3	Production-Line Tests - Conduct the tests detailed in Part AC2.0.
AC1.4	Required Records - Maintain records of test performance. The records shall include the model or catalog designation of the product, the date of production, the tests performed, number of units tested, test results and action taken on rejections. Records for test performance shall be retained for six (6) months and shall be readily available for review by the UL Representative. Exception - Records of test results need not be maintained for 100% Production-Line Tests.
AC1.5	Test Equipment and Personnel - Provide, at a convenient location, all required test equipment and facilities and any required personnel for conducting all tests that are to be performed at the factory. These shall be available when needed so that the inspection work can proceed without undue delay.
AC1.6	Test Equipment Calibration - Determine that the test equipment is functioning properly daily, and have it calibrated at least annually, or whenever it has been subject to abuse (such as being dropped or struck with an object) or its accuracy is questionable. The test equipment and instruments shall be calibrated either by the manufacturer or by an outside laboratory. In either case, it shall be calibrated by comparison with a standard that is traceable to the applicable U.S. or foreign National Standard. A letter from the outside laboratory or from an off-site manufacturer's calibration lab stating that their lab standards are directly traceable to their country's National Standard and outlining their traceability pathway is considered adequate proof of traceability. For in-house calibrations, the Standard (weight and gauge blocks, etc.) used shall be calibrated every three years, or whenever the Standard has been subject to some form of abuse that may affect the Standard's fitness for use. The Standard shall be stored to protect it from damage or deterioration per the Standard manufacturer's recommendations. Records of the calibration of the test equipment and Standard(s) shall be maintained until the next required calibration is completed and recorded, and shall be readily available for review by the UL Representative.
AC1.7	Samples for Follow-Up Testing at UL - If Part AA4.0 specifies that samples are required to be forwarded to UL for Follow-Up Testing, the manufacturer shall forward the samples selected by the UL Representative, to the specified UL Testing Laboratory, within five working days of the UL Representative's inspection visit. Packaging and shipment of the samples are the responsibility of the manufacturer.

AC1.8	Substitution of Non-Specified Plastic Materials - Non-specified plastic materials may not be substituted for Procedure described materials unless a minimum flammability rating at a minimum thickness is described. Before a non-specified plastic material can be used, current UL certification documentation must be checked to ensure that the plastic material has a flammability rating as specified at the thickness specified. Acceptable UL certification documentation includes: (a) the current edition of the Recognized Component Directory or Supplement; (b) the UL Online Certification Directory (http://www.ul.com/database); a copy of the plastic material company's Recognition Report; or d) a copy of the Recognition Card. The Component Recognition Report or Recognition Card may be used only if it is issued after the latest publication of the Recognized Component Directory. It is the responsibility of the manufacturer to provide the UL Representative with the above documentation. NOTE: The above does not apply to materials for which the specific manufacturer and type designation of the plastic is specified in the individual Test Reports (i.e. Enclosures).
AC1.9	Substitution of Non-Specified PWBs – Non-specified printed wiring boards may not be substituted for Procedure described materials unless a minimum flammability rating or maximum operating temperature is described. Before a non-specified printed wiring board can be used, current UL certification documentation must be checked to ensure that the printed wiring board meets the specified flammability rating, operating temperature rating, solder and dwell times, and direct support requirements. Acceptable UL certification documentation includes: (a) the current edition of the Recognized Component Directory or Supplement; (b) the UL Online Certification Directory (http://www.ul.com/database); (c) a copy of the printed wiring board company's Recognition Report; or (d) a copy of the Recognition Card. The Component Recognition Report or Recognition Card may be used only if it is issued after the latest publication of the Recognized Component Directory. It is the responsibility of the manufacturer to provide the UL Representative with the above documentation. NOTE: The above does not apply to materials for which the specific manufacturer and type designation of the plastic is specified in the individual Test Reports (i.e. Enclosures).
AC1.10	Articulate Probe - If the need for an articulate probe is identified in AA4.1.5, it is the manufacturer's responsibility to purchase the probe, and make it available for the UL Representative's use. The probe may be ordered through UL's Corporate Standards Department, at the Northbrook Office.

AC2.0	**REQUIREMENTS FOR PRODUCTION-LINE TESTS**
AC2.1	The following Production-Line Tests shall be conducted on the products covered by this Procedure. During production, the test equipment shall be checked for proper operation at least once during each shift. When the tests are not performed concurrently, it is preferred that the Grounding Continuity Test be performed before either Dielectric Voltage-Withstand Test.
AC2.2	**Production-Line Grounding Continuity Test**
AC2.2.1	General - Except as may be noted under "Exceptions" in each Test Report, the manufacturer shall subject 100 percent of production of all of the following products to a routine Production-Line Grounding Continuity Test as described in section AC2.2.3: A. Products that are provided with a grounding type power supply cord, or B. Fixed products that are for permanent connection to the branch circuit. Exception: This test is not required for permanent connection to the branch circuit by fixed wiring if the design does not employ bonding jumpers or grounding wiring to remote units.
AC2.2.2	Test Equipment - Any suitable continuity-indicating device (such as an ohmmeter, a battery and buzzer combination, or the like) may be used to determine compliance with the Grounding Continuity Test requirements.
AC2.2.3	Method - Continuity shall be determined between the grounding conductor of the attachment plug cap, and/or the designated main grounding point, and accessible dead-metal parts of the product, using the test equipment indicated above. A single test is sufficient if the accessible metal selected is conductively connected by design to all other accessible metal.
AC2.2.4	Basis for Acceptability - There shall be grounding continuity between the parts specified.
AC2.3	**Production-Line Dielectric Voltage-Withstand Test**
AC2.3.1	General - Except as may be noted under "Exceptions" in each Test Report, the manufacturer shall subject 100 percent of production of all products to a routine Production-Line Dielectric Voltage-Withstand Test as described in section AC2.3.3.
AC2.3.2	Test Equipment - The test equipment shall include a means of indicating the test potential, an audible or visual indicator of electrical breakdown, and either a manually operated reset device to restore the equipment after electrical breakdown or an automatic feature that rejects any unacceptable unit. If an ac test potential is applied, the test equipment shall also include a transformer having an essentially sinusoidal output. If the output of the test-equipment transformer is less than 500 volt-amperes, the equipment shall include a voltmeter in the output circuit to indicate the test potential directly. If the output of the test-equipment transformer is 500 volt-amperes or more, the test potential may be indicated (1) by a voltmeter in the primary circuit or in a tertiary-winding circuit, (2) by a selector switch marked to indicate the test potential, or (3), in the case of equipment having a single test-potential output, by a marking in a readily visible location to indicate the test potential. When marking is used without an indicating voltmeter, the equipment shall include a positive means, such as an indicator lamp, to indicate that the manually operated reset switch has been reset following a dielectric breakdown. At least once each year the sensitivity of the dielectric equipment is to be checked. The sensitivity of the equipment is to be such that when adjusted to produce the required test voltage and with a 120,000 ohm resistor across the test terminals, the equipment indicates a “breakdown” (a nonconforming performance indication by the tester) within 0.5 seconds. The resistor used shall be provided by the manufacturer and shall have a resistance found to be equal to or greater than the UL 120,000 ohm precision resistor supplied by the UL Representative. DO NOT USE THE UL RESISTOR FOR THIS CHECK. If the equipment does not meet this sensitivity test, it shall be

	readjusted and provision made to maintain the proper calibration. Test equipment other than that described above may be used when it can be shown that UL has previously confirmed in writing that the equipment complies with the above requirements and is deemed suitable for use for this test.
AC2.3.3	Method - Each product shall withstand without electrical breakdown, as a routine production-line test, the application of an ac potential at a frequency within the range of 40-70 Hz or a dc potential between the primary wiring, including connected components, and accessible dead metal parts that are likely to become energized. The test potential and duration shall be in accordance with Table AC1. The manufacturer's test conditions may be higher than those shown in Table AC1 when necessary to comply with other international product safety certifications. The product may be in a heated or unheated condition for the test. The test shall be conducted when the product is complete (fully assembled), and it is not intended that the product be unwired, modified, or disassembled for the test, unless otherwise permitted below: A. A part, such as a snap cover or a friction-fit knob, that would interfere with conducting the test need not be in place. B. The test may be conducted before final assembly if the test parameters represent that for the completed product. During the test, the primary switch is to be in the on position, both sides of the primary circuit of the product are to be connected together and to one terminal of the test equipment, and the second test-equipment terminal is to be connected to accessible dead metal. When authorized by the "Exceptions" included in each Test Report, solid-state components that are not relied upon to reduce the risk of electric shock, and that might be damaged by the test may be short-circuited by means of a temporary electrical jumper or the test may be conducted without the component electrically connected, provided that a random sampling of each day's production is to be tested at the required potential. The circuitry may be re-arranged for the purpose of the test to minimize the likelihood of solid-state component damage while retaining representative dielectric stress of the circuit.
AC2.3.4	Basis for Acceptability - All products shall withstand the applied potential without an indication of electrical breakdown.

TABLE AC1
DIELECTRIC VOLTAGE-WITHSTAND TEST CONDITIONS

Appliance Rating and Form	Test Potential (V rms)	Test Potential (V dc)	Time	Test Potential (V rms)	Test Potential (V dc)	Time
105 - 130 Volts with or without a motor rated ½ horsepower and not applied to or contacted by persons in normal use	1000	1400	1 min	1200	1700	1 sec
105 - 130 Volts and applied to or contacted by persons in the intended use or with a motor rated more than ½ horsepower	1000 + 2*U[a]	1414 + 2.828*U[a]	1 min	1200 + 2.4*U[a]	1700 + 3.4*U[a]	1 sec
210 - 600 Volts	1000 + 2*U[b]	1414 + 2.828*U[b]	1 min	1200 + 2.4*U[b]	1700 + 3.4*U[b]	1 sec

[a] - Maximum marked voltage but not less than 120 volts
[b] - Maximum marked voltage but not less than 240 volts

AC2.4	**Production-Line Patient Circuit Dielectric Voltage-Withstand Test**
AC2.4.1	General - Except as may be noted under "Exceptions" in each Test Report, the manufacturer shall subject 100 percent of production of the specified products to a routine Patient Circuit Production-Line Dielectric Voltage-Withstand Test as described in section AC2.3.3.
AC2.4.2	Test Equipment - The equipment shall be as specified in AC2.3.2.
AC2.4.3	Method - The test method shall be as specified in AC2.3.3 except: A. The potential shall be applied between the primary wiring and the applied part (patient connection). B. The test potential and duration shall be in accordance with Table AC2.
AC2.3.4	Basis for Acceptability - All products shall withstand the applied potential without an indication of electrical breakdown.

TABLE AC2
PATIENT CIRCUIT DIELECTRIC VOLTAGE-WITHSTAND TEST CONDITIONS

Appliance Rating and Form	Test Potential (V rms)	Test Potential (V dc)	Time	Test Potential (V rms)	Test Potential (V dc)	Time
Any	2500	3500	1 min	3000	4250	1 sec

PART AD

GENERAL TERMINOLOGY

AD1.0	**ABBREVIATIONS / DEFINITIONS**	
AD1.1	KAM	Known Agency Mark (Refer to Table AE3)
AD1.2	LP	Limited Power- A circuit with maximum available power of 15 or less
AD1.3	PWB	Printed wiring board
AD1.4	PRI	Primary (mains)
AD1.5	SEC	Secondary

PART AE

GENERAL PRODUCT CONSTRUCTION REQUIREMENTS

AE1.0	**CONSTRUCTION DETAILS**
AE1.1	Unless otherwise described or supplemented in individual Test Reports, the following requirements apply to all equipment included in this Procedure. It is the manufacturer's responsibility to assure the compliance of production with these requirements.
AE1.1.1	Accessories Parts and Accessories - Such items packaged with the product shall be specifically described in a Test Report.
AE1.1.2	Adapters – Three or two wire grounding type adapters shall not be furnished with the product unless specifically authorized by a Test Report.
AE1.1.3	Attachment Plugs - When a Test Report describes the power supply cord as being brazed, welded or both crimped and soldered to the plug, and the production line cannot be reviewed, the UL Representative will be required to cut open a sample of the attachment plug for confirmation.
AE1.1.4	Bonding - Except where specifically noted in a Test Report, bonding of internal dead-metal parts to the enclosure for grounding purposes shall be accomplished by a positive means such as clamping, riveting, bolting or screwed connection. The bonding connection shall reliably penetrate any nonconductive coatings such as paint or vitreous enamel.
AE1.1.5	Casualty Considerations - Except as described, or as necessary for normal operation of the equipment, there shall be no sharp edges, burrs, points, or spikes inside or outside the device that may cause injury during use or during cleaning operations.
AE1.1.6	Connectors - Connectors shall be applied so as to ensure that all bare strands are contained and insulated.
AE1.1.7	Grounding - The following guidelines shall be observed: A. Non-Detachable Cord Connected Appliance - The equipment-grounding conductor of the flexible cord: 1. Shall be connected to the grounding member of the attachment-plug cap. Note: The grounding member of the attachment-plug shall be fixed in position with respect to the cap. 2. Shall be conductively connected to all dead-metal parts of the product that are specified in the description as being connected to the grounding conductor. The grounding-conductor shall be connected by either (1) a screw or other reliable means which serves no other purpose and which is not liable to be removed during any servicing operation, or (2) a threaded grounding stud on which a closed ring connector secured to the ground conductor is the first conductor mounted and secured by a nut and split ring lockwasher. Solder alone shall not be used for securing this conductor. Note: The screw or stud and nut shall: (1) be provided with a means to penetrate nonconductive coatings, such as paint or enamel; (2) be of a corrosion-resistant metal or shall be protected against corrosion; and (3) be marked on or adjacent with a grounding symbol or the IEC417 Grounding Symbol 5019 " ⏚ ". The installation instructions shall identify the meaning of the symbol. B. Detachable Cord Connected Appliance - Polarization shall be maintained through the load fitting of the cord (appliance coupler) and the mating connector (appliance inlet) on the product. The load fitting shall be a three wire ANSI configuration. Exception: The load fitting need not be an ANSI configuration provided it is wired as follows (the description applies when viewing the face of the connector on the product, with the center

	contact down): 1. The right contact shall be connected to the grounded conductor (neutral) of the cord. 2. The center contact shall be connected to the grounding conductor of the cord. C. Permanently-Connected Products - In a permanently connected product (1) all exposed metal parts, and (2) all dead-metal parts within the enclosure, which are specified in the description as being connected (see "Bonding") to the grounding conductor, shall be conductively connected to: 1. The point of the enclosure at which the metal raceway of the power supply circuit will be connected, and 2. The equipment-grounding field-wiring terminal or lead. The equipment-grounding terminal or grounding lead shall be connected to the frame or enclosure by a positive means, such as by a bolted or screwed connection. The grounding connection shall reliably penetrate nonconductive coatings, such as paint or vitreous enamel. The grounding point shall be so located that it is unlikely that the grounding means will be removed during normal servicing. A wire-binding screw intended for the connection of an equipment-grounding conductor shall be identified by the protective earth symbol. The head shall be either hexagonal shaped or slotted, or both. A pressure wire connector intended for connection of an equipment grounding conductor shall be identified by the protective earth symbol " ⏚ ". The wire-binding screw or pressure wire connector shall be so located that it is unlikely to be removed during normal servicing of the unit.
AE1.1.8	Indicators - Indicator lights shall be clearly visible to the equipment operator.
AE1.1.9	Internal Plastic Parts - For each type of plastic material the manufacturer shall review the Recognized Component Directory and Supplement or UL Online Certification Directory (http://www.ul.com/database) in order to insure that the plastic material in question meets all the material characteristics specified (i.e. flammability rating, Relative Thermal Index (RTI), and color) at the thickness specified. Alternatively, a copy of the Plastic Manufacturer's Component Recognition Report or Recognition Card may be used as a traceability pathway only if these materials were issued after the latest publication of the Recognized Component Directory.
AE1.1.10	Internal Wiring - Conductors shall be routed away or protected from sharp edges and moving parts.
AE1.1.11	Lampholder Connections - All screw shells of lampholders shall be connected to the same conductor of the supply circuit.
AE1.1.12	Loose Strands - Ends of stranded conductors shall have all strands contained to prevent contacting of, or reduction of spacing to, other live parts and dead metal. This can be accomplished by: A. Tinning B. Inserting properly into suitable wire connectors. C. Crimped connectors and/or eyelets with the crimp containing all strands D. Solder lugs.
AE1.1.13	Markings - Required information shall be legibly marked on the product, in the manner and minimum height specified.
AE1.1.14	Multiple Voltage - Cord-connected multiple voltage products shall be provided with an attachment plug that is suitable for the voltage for which the product is set.

AE1.1.15	Polarity - An appliance intended for permanent connection to the source of supply and having an identified terminal or lead; and an appliance employing a power supply cord with a polarized attachment plug cap (excluding 250 volt, 2-pole and 250 volt, 3-pole, 3-phase), utilizing the components indicated, shall have the components wired as follows: A. Lampholders and Receptacles - The screw shell or identified terminal or lead of a lampholder and the identified terminal or lead of a receptacle, shall be connected to the identified grounded conductor or terminal within the product. B. Switches (Single Pole) - Unless otherwise specified in the Procedure, a manual single pole switch, and an automatic control with a marked "off" position, shall not be connected to the identified grounded conductor.
AE1.1.16	Power Supply Cords A. Non-Detachable Power Supply Cord – A non-detachable power supply cord as described in each Test Report must be provided and shipped with the unit in all cases. The power supply cord and any alternatives must be described in each Test Report. Each conductor of a non-detachable power supply cord shall have only one color, except the conductor identified by a combination of green and yellow. B. Detachable Power Supply Cord – The detachable power supply cord as described in each Test Report may or may not be shipped with the unit. Follow the guidelines in Table AE1 to apply the alternatives under each of the situations described in the notes to Table AE1. Table AE1 also includes alternative detachable power supply cords that may be shipped with units intended for use outside the USA.

TABLE AE1
DETACHABLE POWER SUPPLY CORD REQUIREMENTS

Detachable Power Supply Cord	
Provided	Not Provided
A or B	(C and D) or (C and E)
A. The power supply cord should be as described in the Test Report.	
B. The detachable power supply cord is either: 1. Certified by one of the agencies listed in Table AE3; or 2. Comprised of cordage marked with an agency marking per Table AE3 or marked per Table AE4. The fittings are to be marked with at least one of the agencies listed in Table AE3. Units provided with detachable power supply cords, which are certified by one of the agencies listed in Table AE3 or AE4, shall be considered to be intended for use outside of the USA.	
C. A marking must be provided adjacent to the appliance coupler or at an equivalent location either to inform the user on proper selection of the power supply cord or to see the instruction manual for this information. This marking may be in the form of a tag, nonpermanent label, or product insert that is provided on or packaged with the product so that the marking is visible at the time of installation.	
D. The marking (tag, label, or product insert) or instruction manual must contain complete instructions concerning selection of the power supply cord. It shall include either Option 1, 2, or 3 as follows: 1. Reference to a power supply cord must be as a UL Listed detachable power supply cord consisting of the specific configuration of appliance coupler, the cord type, and the electrical rating of the power supply cord as described in each Test Report. Refer to Table AE2 for equivalent cord types. 2. Reference to a power supply cord may be made to a Listed field installed accessory kit containing a suitable Listed power supply cord. Authorization for use of a Listed field installed accessory kit must be included in the individual Test Reports. 3. Reference to a power supply cord may be made to a cord that is not Listed and not intended for use in the United States or Canada. In this case, the manufacturer is to supply the UL Representative with information to verify that the referenced cord is certified or similarly appropriate for use in the destination country.	
E. The reference to the power supply cord (see Note C) shall include instruction for selection of the proper power supply cord as described in Note B above.	

TABLE AE2
EQUIVALENT CORDS

Basis Cord Type	Equivalent Types
SP-2	SPE-2, SPT-2
SP-3	SPE-3, SPT-3
SV	SVE, SVO, SVOO, SVT, SVTO, SVTOO
SJ	SJE, SJO, SJOO, SJT, SJTO, SJTOO
S	SE, SO, SOO, ST, STO, STOO

TABLE AE3
CERTIFICATION MARKINGS

Country	Cert. Agency	Mark	Country	Cert. Agency	Mark
Argentina	IRAM		Ireland	NSAI	
Australia	SAA		Italy	IMQ	
Austria	OVE		Japan	MITI	
Belgium	CEBEC		Netherlands	KEMA	
Canada	CSA		Norway	NEMKO	
China	CCEE		Spain	AEE	
Denmark	DEMKO		Sweden	SEMKO	
Finland	FEI		Switzerland	SEV	
France	UTE		United Kingdom	ASTA	
Germany	VDE			BSI	

TABLE AE4
HAR FLEXIBLE CORDS
APPROVAL ORGANIZATIONS AND CORDAGE HARMONIZATION MARKING METHODS

Approval Organization	Printed or Embossed Harmonization Marking (May be Located On Jacket or Insulation of Internal Wiring)		Alternative Marking Utilizing Black-Red Yellow Thread (Length of color Section, mm)		
Comite Electrotechnique Belge (CEBEC)	CEBEC	<HAR>	10	30	10
Verband Deutscher Elektrotechniker (VDE) e.V. Prufstelle	<VDE>	<HAR>	30	10	10
Union technique de l'Electricite (UTE)	USE	<HAR>	30	10	30
Instituto Italiano del Marchio di Qualita (IMQ)	IEMMEQU	<HAR>	10	30	50
British Approvals Service for Electric Cables (BASEC)	BASEC	<HAR>	10	10	30
N.V. KEMA	KEMA-KEUR	<HAR>	10	30	30
SEMKO AB Svenska Elektriska materielkontrollanstalter	SEMKO	<HAR>	10	10	50
Österreichischer Verband fur Elektrotechnik (ÖVE)	<ÖVE>	<HAR>	30	10	50
Danmarks Elektriske Materialkontroll (DEMKO)	<DEMKO>	<HAR>	30	10	30
National Standards Authority of Ireland (NSAI)	<NSAI>	<HAR>	30	30	50
Norges Elektriske Materiellkontroll (NEMKO)	NEMKO	<HAR>	10	10	70
Asociacion Electrotecnica Y Electronica Espanola (AEE)	<UNED>	<HAR>	30	10	70
Hellenic Organization for Standardization (ELOT)	ELOT	<HAR>	30	30	70
Instituto Portages da Qualidade (IPQ)	np	<HAR>	10	10	90
Schweizerischer Elektro Technischer Verein (SEV)	SEV	<HAR>	10	30	90
Elektriska Inspektoratet	SETI	<HAR>	10	30	90

AE1.1.17	Printed Wiring Boards (PWBs) - PWBs shall show no burning, bubbling or other visible evidence of damage to their conductors or substrate material as a result of the fabrication process. With respect to PWBs using Surface Mounted Technology (SMT), it is acceptable if the SMT assembly process is done at temperatures and times below the soldering limits. If the SMT assembly process is conducted on-site with temperatures/times in excess of soldering limits or if the process is conducted off-site and the temperatures/times cannot be verified, a visual inspection shall be conducted by the UL Representative. The PWBs shall be inspected by the manufacturer for mechanical damage or evidence of exposure to excessive temperatures that may have occurred during the soldering operation. If any nonconforming features (defined below) are found after visual inspection, the manufacturer shall reject the lot (as defined in Table AA1). Otherwise, the use of PWBs may continue without any interruption. The base material and the conductors shall be examined for nonconforming features as indicated below. A. Conductors, Terminal Pads, and Tabs 1. Reduction in cross-section, such as scratches, nicks, pin holes, tearing. 2. Loosening or lifting of printed wiring conductor, pad, or tab from the base material. 3. Sections missing or damaged. 4. Blistering 5. Breaks B. Base Material 1. Warping 2. Cracking 3. Charring, blistering, or other heat damage due to solder process 4. Delamination
AE1.1.18	Protection of Wiring - All wire and wire insulation in the product shall be protected from damage. This is commonly achieved by securement, segregation, and routing to keep the wire away from parts or assemblies which can damage the wire or insulation. Internal wiring that might make contact with metal parts shall be protected from sharp metal edges. This can be accomplished by rounding or deburring the metal, using a Recognized Component bushing, or through other construction features described in the Test Report. If the wiring is located where it may be in proximity to combustible material, it shall be protected by the method(s) described in the individual Test Report. Conductors shall be examined for evidence of damage. Faulty practices which can cause damage to conductors and/or insulation include: A. Improper application of crimped connectors, including but not limited to, use of crimping tool and dies not recommended by the manufacturer of the connector. B. Improper insulation removal. C. Overheating of conductor insulation because of routing or contact with hot surfaces during or after installation. D. Use of wire in which the insulation has been cut, cracked, crushed, abraded, etc. Constructions which may cause damage to conductors and/or insulation include:

	A. Moving parts such as rotating or reciprocating cams, shafts, and the like, as well as removable or sliding covers, hinged doors. B. Sharp edges and corners (including screw threads, burrs, points, stamped metal edges). C. Heat sources (including lamps, heating elements, etc.). D. Assemblies that clamp or squeeze wire insulation, unless described in the Test Report.
AE1.1.19	Securement of Parts - Screws or other fastenings used to mount or support small, fragile, insulating parts shall not be tight enough to cause cracking or breaking of these parts. Uninsulated live parts, components which support live parts, and dead metal parts, that are normally intended to remain stationary, shall be prevented from rotating or shifting if movement will result in twisting or stress of internal wiring or connections, or spacings being reduced below that specified in the Test Report. Similar parts that are normally intended to move or rotate shall be prevented from excessive movement if such movement will result in twisting or stress of internal wiring or connections, or spacings being reduced below that specified in the Test Report. A switch, lampholder, attachment plug receptacle, motor attachment plug cap, or other components subject to handling by the user shall be mounted securely and prevented from rotating. Exception: Based on engineering considerations certain constructions of securely mounted push button or plunger type switches, and lampholders of the type in which the lamp cannot be replaced (such as a neon pilot or indicator light in which the lamp is sealed in a non-removable jewel) may be excluded from the above. These constructions are described in the Procedure. However, in no case will nonconforming spacings be allowed. Some means commonly used to prevent rotation are: A. Lock washer. B. Matched keying of the component and its mounting. C. Two or more fasteners (screws, rivets, pins, etc.). D. Strap, clip, or pin fitted into an adjacent part. E. Physical barrier (molded boss, side of enclosure, adjacent component, etc.) that bears against the component.
AE1.1.20	Solder Connections - All solder connections shall be made mechanically secure before soldering. Some typical examples of mechanical securement are: A. Twisting wire around a solder post that has a change in dimension or restriction so unsoldered wire will not slip off post. B. Inserting wire through an opening, and bending over the free end.
AE1.1.21	Strain Relief - Strain Relief methods such as tying the supply cord into a knot or tying the ends of the cord with string shall not be used.
AE1.1.22	Usage Markings - There shall be no marking in the instruction manual, or on the carton or package that is, or could be construed to be, in conflict with or an extension of the use covered in the Test Report.

PART AF

UL CERTIFICATION MARK

Product Category:	Medical Equipment
Product Category CCN:	PIDF
Control Number(s):	3SPA

AF1.1	The Test Report covering each product must be consulted to determine which Classification Marks are authorized for use in conjunction with that product.
AF1.1.1	The following Mark is authorized for use on products which are Classified **only** to the requirements for the United States: CLASSIFIED UL (PRODUCT IDENTITY) (Scope Option 1, 2, or 3) XXXX
AF1.2	The Classification Mark consists of several elements placed in close proximity and shall appear on Classified products only.
AF1.2.1	Element 1 – UL Symbol. There is no minimum height for the UL Symbol, as long as it is legible. The minimum height of the registered trademark symbol ® shall be 3/64 of an inch. When the overall diameter of the UL Mark is less than 3/8 of an inch, the trademark symbol may be omitted if it is not legible to the naked eye. Information on downloading electronic versions or receiving camera-ready artwork of the UL Symbols may be obtained at www.ul.com
AF1.2.2	Element 2 – The word “CLASSIFIED”
AF1.2.3	Element 3 – A product identity
AF1.2.3.1	The product identity is: “Medical Equipment” or another appropriate product identity as shown in the individual Test Reports.
AF1.2.3.2	Where products are so indicated in individual Test Reports, the product identity shall be preceded by "FIELD INSTALLED”, “REBUILT”, “REFURBISHED”, “REMANUFACTURED”, or “RECONDITIONED”, as appropriate.
AF1.2.4	Element 4 – A control number represented above by XXXX that is to be replaced with the control number indicated at the top of the page.
AF1.2.5	Element 5 – A statement of scope
AF1.2.5.1	Scope Option 1 - WITH RESPECT TO ELECTRICAL SHOCK, FIRE AND MECHANICAL HAZARDS ONLY IN ACCORDANCE WITH [STANDARD] where [STANDARD] is “UL2601-1” or “UL60601-1” as stated in the Test Report, and applicable Particular (IEC 60601-2-XX) and/or related Collateral (IEC 60601-1-XX) Standards for which the product has been found to comply by UL.
AF1.2.5.2	Scope Option 2 – [STANDARD] See Accompanying Documents where [STANDARD] is “UL2601-1” or “UL60601-1” as stated in the Test Report. The “Accompanying Documents” shall contain the complete Classification Marking incorporating Scope Option 1.

AF1.2.5.3	Scope Option 3 – [STANDARD] ⚠ where ⚠ is IEC 60348 Symbol 14 and [STANDARD] is “UL2601-1” or “UL60601-1” as stated in the Test Report. The Accompanying Documents shall contain the complete Classification Marking incorporating Scope Option 1.
AF1.2.6	Element 6 – Products that are Complementary Listed to other categories shall include the statement “ALSO LISTED AS (PRODUCT IDENTITY)”, where the product identity is that of the complementary category as indicated in the individual Test Reports.
AF1.3	A separable Classification Mark (not part of a nameplate and in the form of decals, stickers or labels) will always include all elements.
AF1.4	The manufacturer may reproduce the Mark or obtain it from a UL authorized supplier.

PART AF

UL CERTIFICATION MARK

Product Category:	Medical Equipment
Product Category CCN:	PIDF7
Control Number(s):	3SPA

AF1.1	The Test Report covering each product must be consulted to determine which Classification Marks are authorized for use in conjunction with that product.
AF1.1.1	The following Mark is authorized for use on products which are Classified **only** to the requirements for Canada: (PRODUCT IDENTITY) (Scope Option 1, 2 or 3) XXXX
AF1.1.2	Either of the following Marks is authorized for use on products which are Classified to the requirements of **both** the United States and Canada: (PRODUCT IDENTITY) (Scope Option 4, 5 or 6) XXXX (PRODUCT IDENTITY) (Scope Option 4, 5 or 6) XXXX
AF1.2	The Classification Mark consists of several elements placed in close proximity and shall appear on Classified products only.
AF1.2.1	Element 1 – UL Symbol. There is no minimum height for the UL Symbol, as long as it is legible. The minimum height of the registered trademark symbol ® shall be 3/64 of an inch. When the overall diameter of the UL Mark is less than 3/8 of an inch, the trademark symbol may be omitted if it is not legible to the naked eye. Information on downloading electronic versions or receiving camera-ready artwork of the UL Symbols may be obtained at www.ul.com
AF1.2.2	Element 2 – The word “CLASSIFIED”
AF1.2.3	Element 3 – A product identity
AF1.2.3.1	The product identity is: “Medical Equipment” or another appropriate product identity as shown in the individual Test Reports.
AF1.2.3.2	Where products are so indicated in individual Reports, the product identity shall be preceded by "FIELD INSTALLED”, “REBUILT”, “REFURBISHED”, “REMANUFACTURED”, or “RECONDITIONED”, as appropriate.
AF1.2.4	Element 4 – A control number represented above by XXXX that is to be replaced with the control number indicated at the top of the page.
AF1.2.5	Element 5 – A statement of scope
AF1.2.5.1	Scope Option 1 - WITH RESPECT TO ELECTRICAL SHOCK, FIRE AND MECHANICAL HAZARDS ONLY IN ACCORDANCE WITH [STANDARD] where [STANDARD] is “CAN / CSA C22.2 No. 601.1”, and applicable Particular (IEC 60601-2-XX, CAN / CSA C22.2 No. 601.2.XX) and/or related Collateral (IEC 60601-1-XX, CAN / CSA C22.2 No. 601.1.XX) Standards for which the product has been found to comply by UL.

AF1.2.5.2	Scope Option 2 – CAN / CSA C22.2 No. 601.1 See Accompanying Documents The “Accompanying Documents” shall contain the complete Classification Marking incorporating Scope Option 1.
AF1.2.5.3	Scope Option 3 – CAN / CSA C22.2 No. 601.1 ⚠ where ⚠ is IEC 60348 Symbol 14. The Accompanying Documents shall contain the complete Classification Marking incorporating Scope Option 1.
AF1.2.5.4	Scope Option 4 - WITH RESPECT TO ELECTRICAL SHOCK, FIRE AND MECHANICAL HAZARDS ONLY IN ACCORDANCE WITH [STANDARD] where [STANDARD] is “UL2601-1” or “UL60601-1” as stated in the Test Report. May additionally include the Canadian (CAN / CSA C22.2 No. 601.1), and applicable Particular (IEC 60601-2-XX, CAN / CSA C22.2 No. 601.2.XX) and/or related Collateral (IEC 60601-1-XX, CAN / CSA C22.2 No. 601.1.XX) Standards for which the product has been found to comply by UL.
AF1.2.5.5	Scope Option 5 – [STANDARD] See Accompanying Documents where [STANDARD] is “UL2601-1” or “UL60601-1” as stated in the Test Report. May additionally include the Canadian (CAN / CSA C22.2 No. 601.1). The “Accompanying Documents” shall contain the complete Classification Marking incorporating Scope Option 4.
AF1.2.5.6	Scope Option 6 – [STANDARD] ⚠ where ⚠ is IEC 60348 Symbol 14 and [STANDARD] is “UL2601-1” or “UL60601-1” as stated in the Test Report. May additionally include the Canadian (CAN / CSA C22.2 No. 601.1). The “Accompanying Documents” shall contain the complete Classification Marking incorporating Scope Option 4.
AF1.3	A separable Classification Mark (not part of a nameplate and in the form of decals, stickers or labels) will always include all elements.
AF1.4	The manufacturer may reproduce the Mark or obtain it from a UL authorized supplier.

COVER PAGE FOR TEST REPORT

Product Category:	Medical Electrical Equipment
Product Category CCN:	PIDF, PIDF7
Test Procedure:	Classification
Product:	Panel PC
Model/Type Reference:	MTP-12XX (X can be number 0 through 9 , a - z , A - Z or Blank. Differences are for business purpose only, not related to safety issue)
Rating(s):	Input rating:100-240 Vac,47-63 Hz, 1.6-0.8 A
Standards:	UL 60601-1, 1st Edition, 2006-04-26 (Medical Electrical Equipment, Part 1: General Requirements for Safety) CAN/CSA-C22.2 No. 601.1-M90, 2005 (Medical Electrical Equipment - Part 1: General Requirements for Safety)
Applicant Name and Address:	AVALUE TECHNOLOGY INC 7TH FL 228 LIAN CHENG RD CHUNG HO TAIPEI HSIEN 235 TAIWAN

This Report includes the following parts, in addition to this cover page:

1. Specific Inspection Criteria
2. Specific Technical Criteria
3. Clause Verdicts
4. Critical Components
5. Test Results
6. National Differences
7. Enclosures

Copyright © 2008

This is to certify that representative samples of the products covered by this Test Report have been investigated in accordance with the above referenced Standards. The products have been found to comply with the requirements covering the category and the products are judged to be eligible for Follow-Up Service under the indicated Test Procedure. The manufacturer is authorized to use the UL Mark on such products which comply with this Test Report and any other applicable requirements of Underwriters Laboratories Inc. ('UL') in accordance with the Follow-Up Service Agreement. Only those products which properly bear the UL Mark are considered as being covered by UL's Follow-Up Service under the indicated Test Procedure.

The applicant is authorized to reproduce the referenced Test Report provided it is reproduced in its entirety.

Any information and documentation involving UL Mark services are provided on behalf of Underwriters Laboratories Inc. (UL) or any authorized licensee of UL.

Test Report By:

Conga Chen/ Chenchen Lee
Engineer
Underwriters Laboratories Taiwan Co., Ltd.

Reviewed By:

Jimmy Deng
Associate Project Engineer
Underwriters Laboratories Taiwan Co., Ltd.

Copyright © 2008

SPECIFIC INSPECTION CRITERIA

BA1.0	**Special Instructions to UL Representative**
BA1.1	N/A

BB1.0	**Supporting Documentation**
BB1.1	The following documents located at the beginning of this Procedure supplement the requirements of this Test Report: A. Authorization - The Authorization page may include additional Factory Identification Code markings. B. Generic Inspection Instructions - i. Part AC details important information which may be applicable to products covered by this Procedure. Products described in this Test Report must comply with any applicable items listed unless otherwise stated in the body of this Test Report. ii. Part AE details any requirements which may be applicable to all products covered by this Procedure. Products described in this Test Report must comply with any applicable items listed unless otherwise stated in the body of each Test Report. iii. Part AF details the requirements for the UL Certification Mark which is not controlled by the technical standard used to investigate these products. Products are permitted to bear only the Certification Mark(s) corresponding to the countries for which it is certified, as indicated in each Test Report.

BC1.0	**Markings and instructions**	
BC1.1	The following markings and instructions are provided as indicated.	
BC1.2	All clause references are from UL 60601-1, 1st Edition, 2006-04-26 (Medical Electrical Equipment, Part 1: General Requirements for Safety).	
Standard Clause	Clause Title	Marking or Instruction Details
6.1e	Company identification	Classified or Recognized company's name, Trade name, Trademark or File
6.1f	Model	Model number
6.1g	Supply Connection	Voltage range, ac/dc, phases if more than single phase
	Alternating current	∿
6.1h	Supply Frequency	Rated frequency range in hertz
6.1j	Power Input	Amps, VA, or Watts
6.1q	Attention, consult accompanying documents	⚠
6.2f	Protective earth ground	⏚
	US Hospital Grade Marking	"Grounding Reliability Can Only Be Achieved When The Equipment Is Connected To An Equivalent Receptacle Marked 'Hospital Only' Or 'Hospital Grade'." (located on product or power supply cord)

BD1.0	**Production-Line Testing Requirements**			
BD1.1	**Test Exemptions** - The following models are exempt from the indicated test			
	Model	Grounding Continuity	Dielectric Voltage Withstand	Patient Circuit Dielectric Voltage Withstand
	N/A			
BD1.2	**Solid-State Component Test Exemptions** - The following solid-state components may be disconnected from the remainder of the circuitry during either Dielectric Voltage Withstand Test:			
	N/A			

BE1.0	**Sample and Test Specifics for Follow-Up Tests at UL**			
BE1.1	The following tests shall be conducted in accordance with the Generic Inspection Instructions			
	Model	Samples	Test	Test Details
	N/A			

SPECIFIC TECHNICAL CRITERIA

TEST REPORT UL 60601-1 Medical Electrical Equipment Part 1: General requirements for safety	
Report Reference No.....:	E320761-A1-UL-1
Compiled by .....:	Conga Chen/ Chenchen Lee
Reviewed by .....:	Jimmy Deng
Date of issue .....:	2008-08-22
Standards .....:	UL 60601-1, 1st Edition, 2006-04-26 (Medical Electrical Equipment, Part 1: General Requirements for Safety) CAN/CSA-C22.2 No. 601.1-M90, 2005 (Medical Electrical Equipment - Part 1: General Requirements for Safety)
Test procedure .....:	Classification
Non-standard test method .....:	N/A
Test item description .....:	Panel PC
Trademark .....:	None
Model and/or type reference .....:	MTP-12XX (X can be number 0 through 9 , a - z , A - Z or Blank. Differences are for business purpose only, not related to safety issue)
Rating(s) .....:	Input rating:100-240 Vac,47-63 Hz, 1.6-0.8 A

GENERAL INFORMATION			
Test item particulars (see also clause 5):			
Classification of installation and use ..... :	Transportable		
Supply connection ..... :	Appliance coupler		
Accessories and detachable parts included in the evaluation ..... :	None		
Options included ..... :	None		
Possible test case verdicts:			
- test case does not apply to the test object ..... :	N / A		
- test object does meet the requirement ..... :	P(Pass)		
- test object does not meet the requirement ..... :	F(Fail) (acceptable only if a corresponding, less stringent national requirement is "Pass")		
Abbreviations used in the report:			
- normal condition ..... :	N.C.	- single fault condition ..... :	S.F.C.
- operational insulation ..... :	OP	- basic insulation ..... :	BI
- basic insulation between parts of opposite polarity:	BOP	- supplementary insulation ..... :	SI
- double insulation ..... :	DI	- reinforced insulation ..... :	RI
General remarks:			
- "(see Enclosure #)" refers to additional information appended to the Test Report			
- "(see appended table)" refers to a table appended to the Test Report			
- Throughout the Test Report a point is used as the decimal separator			

General Product Information:	
CA1.0	**Report Summary**
CA1.1	N/A
CB1.0	**Product Description**
CB1.1	The Panel PC is consisted with 12.1" TFT LCD Panel, HDD, CPU (Intel Celeron M600MHZ with 512K L2 Cache) , mainboard and enclosed in metal and plastic enclosure. All components were soldered on PWB and enclosed in metal chassis and plastic enclosure. A stand with standard VESA mounting is provided with the Panel PC for installing. The Mains of the Product is supplied from UL certified power supply_ Sinpro Electronic Co. Ltd., Model MBU60-105, input: 100-240 Vac, 47-63 Hz, 1.6-0.8 A, (QQHM2/8, E230351-A1).
CC1.0	**Model Differences**
CC1.1	N/A

CD1.0	**Additional Information**	
CD1.1	N/A	
CE1.0	**Technical Considerations**	
CE1.1	The product was investigated to the following additional standards:	UL 60601-1, 1st Edition, 2006-04-26 (includes National Differences for USA), CAN/CSA-C22.2 No. 601.1-M90 (R2005) (includes National Differences for Canada)
CE1.2	The product was not investigated to the following standards or clauses:	Clause 52.1, Programmable Electronic Systems (IEC 601-1-4), Clause 48, Biocompatibility (ISO 10993-1), Clause 36, Electromagnetic Compatibility (IEC 601-1-2)
CE1.3	The product is Classified only to the following hazards:	Casualty, Shock, Fire
CE1.4	The degree of protection against harmful ingress of water is:	Ordinary
CE1.6	The mode of operation is:	Continuous
CE1.7	Software is relied upon for meeting safety requirements related to mechanical, fire and shock:	No
CE1.8	The product is suitable for use in the presence of a flammable anesthetics mixture with air or oxygen or with nitrous oxide:	No
CE2.0	The product is considered as Nonpatient Equipment, not intened to be used within Patient Vicinity. (Caluse 19.5DV.2 Leakage Current Limitation for Nonpatient Equipment is 500uA rather than 300uA.)	--

IEC 60601			
Clause	Requirement + Test	Result - Remark	Verdict

3	**GENERAL REQUIREMENTS**		Pass
3.1	Equipment when transported, stored, installed, operated in normal use and maintained according to the instructions of the manufacturer, causes no safety hazard which could reasonably be foreseen and which is not connected with its intended application in normal condition (N.C.) and in single fault condition (S.F.C.)	The equipment causes no hazards when used according the manufacturers instructions.	Pass
3.4	An alternative means of construction is used to that detailed in this standard and it can be demonstrated that an equivalent degree of safety is obtained	No alternative construction.	N/A

5	**CLASSIFICATION**		Pass
5.1	Type of protection against electric shock		Pass
	Class I equipment		Pass
	Class II equipment		N/A
	Internally powered equipment		N/A
5.2	Degree of protection against electric shock		Pass
	Type B applied part		N/A
	Type BF applied part		N/A
	Type CF applied part		N/A
	Not classified - no applied parts		Pass
5.3	Classification according to the degree of protection against ingress of water as detailed in the current edition of IEC 529 (see 6.1.1)..... :	IPX0, Ordinary equipment.	Pass
5.4	Methods of sterilization or disinfection		N/A
5.5	Equipment not suitable for use in the presence of flammable mixtures	The equipment is not an AP or APG category equipment.	Pass
	Category AP equipment		N/A
	Category APG equipment		N/A
5.6	Mode of operation:		Pass
	-continuous operation		Pass
	-short-time operation, specified operation; period . :		-
	-intermittent operation, specified operation; rest		-

IEC 60601			
Clause	Requirement + Test	Result - Remark	Verdict
	period ..... :		
	-continuous operation with short-time, stated permissible loading time ..... :		-
	-continuous operation with intermittent, stated permissible loading/rest time ..... :		-

IEC 60601			
Clause	Requirement + Test	Result - Remark	Verdict

INSULATION DIAGRAM

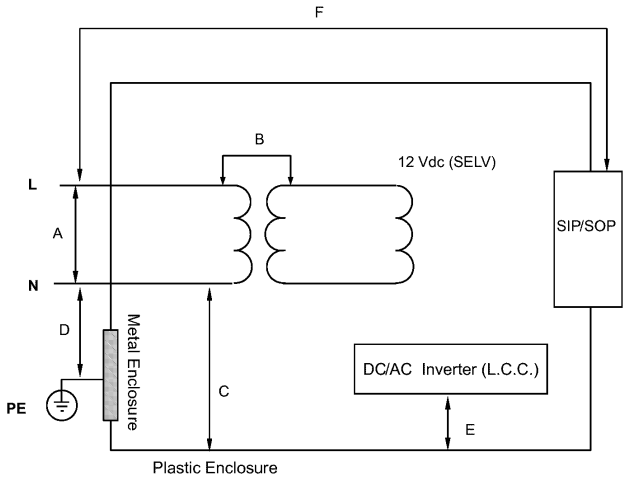

IEC 60601			
Clause	Requirement + Test	Result - Remark	Verdict

TABLE: to insulation diagram

Area	Insulation type: operational / basic / supplementary / double / reinforced	Reference voltage (V)	Required creepage (mm)	Required clearance (mm)	Measured creepage (mm)	Measured clearance (mm)	Remarks
A	A-f, BOP	250	3.0	1.6	3.0	1.6	L to N on PWB of power supply, Dielectric strength= 1500 Vac
B	A-e, DI/RI	292	12.0	7.0	12.0	7.0	Primary to Secondary of transformer within power supply, Dielectric strength= 4452 Vac
C	A-a2, DI/RI	250	8.0	5.0	8.0	5.0	Primary to secondary of plastic enclosure, Dielectric strength= 4000 Vac
D	A-a1, BI	250	4.0	2.5	4.0	2.5	Primary of power supply to PE on power supply, Dielectric strength= 1500 Vac
D	A-a1, BI	250	4.0	2.5	4.0	2.5	Primary of power supply to PE on metal enclosure of panel PC, Dielectric strength= 1500 Vac
E	A-a2, LCC	--	--	--	--	--	1. Pass L.C.C; 2.Leakage Current (HV to PE short) < Limitation
F	A-a2, DI/RI	250	8.0	5.0	8.0	2.5	Primary of panel PC to SIP/SOP of panel PC, Dielectric strength= 4000 Vac

IEC 60601			
Clause	Requirement + Test	Result - Remark	Verdict

INSULATION DIAGRAM CONVENTIONS

Insulation diagram is a graphical representation of equipment insulation barriers, protective impedance and protective earthing. If feasible, use the following conventions to generate the diagram:

1. All isolation barriers are identified by letters between separate parts of diagram, for example separate transformer windings, optocouplers, wire insulation, creepage and clearance distances.
2. Parts connected to earth with large dots are protectively earthed. Other connections to earth are functional.
3. Applied parts are extended beyond the equipment enclosure and terminated with an arrow.
4. Parts accessible to the operator only are extended outside of the enclosure, but are not terminated with an arrow.
5. Blocks containing the letter "Z" indicate protective impedance.
6. Operational Insulation (OP) - indicates insulation that may be required for function of the equipment, but is not required or relied on for compliance with the requirements of clauses 17, 20 and 57.

IEC 60601			
Clause	Requirement + Test	Result - Remark	Verdict

6	**IDENTIFICATION, MARKING AND DOCUMENTS**		Pass
6.1	Marking on the outside of equipment or equipment parts		Pass
6.1c	Markings of the specific power supply affixed		N/A
6.1d	If marking is not practicable due to size or nature of enclosure, information is included in accompanying documents	See User manual (Enclosure 6-1) for detail	Pass
6.1e	Name and/or trademark of the manufacturer or supplier ..... :	Avalue Technology Inc.	Pass
6.1f	Model or type reference..... :	MTP-12XX (X can be number 0 through 9 , a - z , A - Z or Blank. Differences are for business purpose only, not related to safety issue)	Pass
6.1g	Rated supply voltages or voltage range(s)	100-240 Vac	Pass
	Number of phases ..... :	Single	Pass
	Type of current..... :	AC	Pass
6.1h	Rated frequency or rated frequency range(s) (Hz) :	47-63 Hz	Pass
6.1j	Rated power input (VA, W or A) ..... :	1.6-0.8 A	Pass
6.1k	Power output of auxiliary mains socket - outlets		N/A
6.1l	Class II symbol	Class I equipment	N/A
	Symbol for degree of protection against ingress of water provided ..... :	Optional, IPX0 or ordinary equipment.	Pass
	Symbol for protection against electric shock ..... :	No applied part.	N/A
	If equipment has more than one applied part with different degrees of protection, the relevant symbols are clearly marked on such applied parts, or on or near relevant outlets		N/A
	Symbol for protection of defibrillation-proof applied parts	No applied parts.	N/A
	Symbol 14 from Table DI for defibrillation-proof with protection partly in patient cable	No patient cable.	N/A
6.1m	Mode of operation (if no marking, suitable for continuous operation)	Optional, continuous operation.	Pass
6.1n	Types and rating of external accessible fuses..... :	No external accessible fuses.	N/A
6.1p	Ratings of external output:..... :	No external output.	N/A
6.1q	Symbol for physiological effect(s):		N/A
	- attention, consult accompanying documents		N/A

IEC 60601			
Clause	Requirement + Test	Result - Remark	Verdict
	- non-ionizing radiation, or symbols as adopted by ISO or IEC 417		N/A
6.1r	Anaesthetic-proof symbol: AP or APG ..... :		N/A
6.1s	Dangerous voltage symbol	No dangerous voltage	N/A
6.1t	Special cooling requirements	No special cooling requirements	N/A
6.1u	Limited mechanical stability		N/A
6.1v	Protective packing requirement(s)	No special measures have to be taken during transport or storage.	N/A
	- Marking(s) for unpacking safety hazard(s)		N/A
	- Equipment or accessories supplied sterile, marked as sterile		N/A
6.1y	Potential equalization terminal	No potential equalization terminal	N/A
	- Functional earth terminal	No functional earth terminal	N/A
6.1z	Removable protective means	No such means.	N/A
	Durability of marking test	(see appended table 6.1)	Pass
6.2	Marking on the inside of equipment or equipment parts		Pass
6.2a	Nominal voltage of permanently installed equipment	Not permanently installed equipment.	N/A
6.2b	Maximum power loading for heating elements or holders for heating lamps	No heating elements and lamps.	N/A
6.2c	Dangerous voltage symbol	No dangerous voltage presents.	N/A
6.2d	Type of battery and mode of insertion	No such component	N/A
	- Marking referring to accompanying documents used for battery not intended to be changed by the operator		N/A
6.2e	Fuses accessible with a tool identified either by type and rating or by a reference to diagram	Evaluated as part of power supply	N/A
6.2f	Protective earth terminal	Class I equipment	Pass
6.2g	Functional earth terminal		N/A
6.2h	Supply neutral conductor in permanently installed equipment (N)	Not permanently installed equipment	N/A
6.2j	Markings required in 6.2 f), h), k), and l) remain visible after connection and are not affixed to parts		Pass

IEC 60601			
Clause	Requirement + Test	Result - Remark	Verdict
	which have to be removed		
	- Markings comply with IEC 445		Pass
6.2k	For permanently connected devices the supply connections are clearly marked adjacent to the terminals (or in accompanying documents for small equipment)		N/A
6.2l	Statement for suitable wiring materials at temperatures over 75°C		N/A
6.2n	Capacitors and/or circuit parts marked as required in Sub-clause 15c		N/A
6.3	Marking of controls and instruments		Pass
6.3a	Mains switch clearly identified	The product with a non-mains switch	N/A
	- ON and OFF positions marked according to Symbols 15 and 16 of table D1 or indicated by an adjacent indicator light	Not mains switch	N/A
6.3b	Indication of different positions of control devices and switches	See Enclosure3-02 for details	Pass
6.3c	Indication of the direction in which the magnitude of the function changes, or an indicating device		N/A
6.3f	The functions of operator controls and indicators are identified		N/A
6.3g	Numeric indications of parameters are in SI units except for units listed in Am. 2	No numeric indication used for control.	N/A
6.4	Symbols		Pass
	Used symbols comply with Appendix D or IEC 417 and/or IEC 878 or ISO publications (if applicable)		Pass
6.5	Colors of the insulation of conductors		Pass
6.5a	Protective earth conductor has green/yellow insulation	See Enclosure 3-06 for details	Pass
6.5b	All insulations of internal protective earth conductors are green/yellow at least at their terminations		N/A
6.5c	Only protective or functional earthing, or potential equalization conductors are green/yellow		Pass
6.5d	Color of neutral conductor ..... :	Product with detachable powers supply cord	N/A
6.5e	Colors of phase conductor(s) ..... :		N/A
	- Compliance with IEC 227 and IEC 245		Pass

IEC 60601			
Clause	Requirement + Test	Result - Remark	Verdict
6.5f	Additional protective earthing in multi-conductor, cords are marked green/yellow at the ends of the additional conductors		N/A
6.6	Medical gas cylinders and connections		N/A
6.6a	In accordance with ISO ISO/R 32		N/A
6.6b	Identification of connection point		N/A
6.7	Indicator lights and push-buttons		N/A
6.7a	Red indicator lights used exclusively to indicate a warning of danger and/or a need for urgent action	No such function	N/A
	- Yellow used to indicate caution or attention required		N/A
	- Green used to indicate ready for action		N/A
6.7b	Color red used only for push-buttons by which a function is interrupted in case of emergency		N/A
6.8	ACCOMPANYING DOCUMENTS		Pass
6.8.1	Equipment accompanied by documents containing at least instructions for use, a technical description and an address to which the user can refer	See P.3, 12, 13 of User manual (Enclosure 6-1) for detail	Pass
	Classifications specified in Clause 5 included in both the instructions for use and the technical description	See P.12, 13 of User manual (Enclosure 6-1) for detail	Pass
	Markings specified in Sub-clause 6.1 included in the accompanying documents if they have not been permanently affixed to equipment	See P.6 of User manual (Enclosure 6-1) for detail	Pass
	Warning statements and the explanation of warning symbols provided in the accompanying documents	See P.4, 6, 7 of User manual (Enclosure 6-1) for detail	Pass
6.8.2	Instructions for use		Pass
6.8.2a	General information provided in instructions for use	See P.10 of User manual (Enclosure 6-1) for detail	Pass
	- state the function and intended application of the equipment	See P.10 of User manual (Enclosure 6-1) for detail	Pass
	- include an explanation of: the function of controls, displays and signals		Pass
	- the sequence of operation	See P.11 of User manual (Enclosure 6-1) for detail	Pass
	- the connection and disconnection of detachable parts and accessories	No such part	N/A
	- the replacement of material which is consumed during operation		N/A

IEC 60601			
Clause	Requirement + Test	Result - Remark	Verdict
	- information regarding potential electromagnetic or other interference and advice regarding avoidance	See P.2 of User manual (Enclosure 6-1) for detail	Pass
	- include: indications of recognized accessories, detachable parts and materials, if the use of other parts or materials can degrade minimum safety	No such part	N/A
	- instructions concerning cleaning, preventive inspection and maintenance to be performed including the frequency of such maintenance	See P.11 of User manual (Enclosure 6-1) for detail	Pass
	General information provided in instructions:		Pass
	- information for the safe performance of routine maintenance	See P.10, 11 of User manual (Enclosure 6-1) for detail	Pass
	- parts on which preventive inspection and maintenance shall be performed by other persons including the periods to be applied		Pass
	- explanation of figures, symbols, warning statements and abbreviations on the equipment	See P.6 of User manual (Enclosure 6-1) for detail	Pass
6.8.2c	Signal output or signal input parts intended only for connection to specified equipment described	See P.9 of User manual (Enclosure 6-1) for detail	Pass
6.8.2d	Details about acceptable cleaning, disinfection or sterilization methods included	See P.10 ,11 of User manual (Enclosure 6-1) for detail	Pass
6.8.2e	Warning statement for mains operated equipment with additional power source	No such part	N/A
6.8.2f	A warning to remove primary batteries if equipment is not likely to be used for some time	No such part	N/A
6.8.2g	Instructions to ensure safe use and adequate maintenance of rechargeable batteries	No such component	N/A
6.8.2h	Identification of specified external power supplies or battery chargers necessary to ensure compliance with the requirements of IEC 601-1	No such part	N/A
6.8.2j	Identification of any risks associated with the disposal of waste products, residues, etc.	See P. 11 of User manual (Enclosure 6-1) for detail	Pass
	- Advice in minimizing these risks		Pass
6.8.3	Technical description		Pass
6.8.3a	All characteristics essential for safe operation provided	See P.12, 13 of User manual (Enclosure 6-1) for detail	Pass
6.8.3b	Required type and rating of fuses utilized in the mains supply circuit external to permanently installed equipment	No such part	N/A
	- Instructions for replacement of interchangeable and/or detachable parts which are subject to	No such part	N/A

IEC 60601			
Clause	Requirement + Test	Result - Remark	Verdict
	deterioration during normal use		
6.8.3c	Instructions or reference information for repair of equipment parts designated by the manufacturer as repairable provided	See P.3 of User manual (Enclosure 6-1) for detail	Pass
6.8.3d	Environmental conditions for transport and storage specified in accompanying documents and marked on packaging	See P.10, 12 of User manual (Enclosure 6-1) for detail; the Product was evaluated at the required environment of UL60601, 2nd Edition: -20- 65 degree C; 35-75%RH.	Pass
7	**POWER INPUT**		Pass
	Power Input Measurements	(see appended table 7)	Pass
10	**ENVIRONMENTAL CONDITIONS**		Pass
10.1	Equipment is capable while packed for transport or storage of being exposed to the conditions stated by the manufacturer	Storage and transportation: 20- 65 degree C; 35-75%RH.	Pass
10.2.2a	Rated voltage not exceeding 250 V for hand-held equipment	Not hand-held equipment.	N/A
	Rated voltage not exceeding 250 V d.c. or single-phase a.c. or 500 V polyphase a.c. for equipment up to 4kVA	100-240 Vac, single-phase	Pass
	Rated voltage not exceeding 500 V for all other equipment		N/A
	Rated input frequency not more than 1kHz	47-63 Hz	Pass
10.2.2b	Internal replaceable electrical power source specified	Internal power supply isn't replaceable.	N/A

IEC 60601			
Clause	Requirement + Test	Result - Remark	Verdict

14	**REQUIREMENTS RELATED TO CLASSIFICATION**		Pass
14.4a	Class I and Class II equipment in addition to basic insulation provided with an additional protection	With Class I power supply	Pass
14.4b	Equipment supplied from external dc source of reverse polarity results in no safety hazard		N/A
14.5a	Dual classification for internally powered equipment with a means of connection to supply mains		N/A
14.5b	Internally powered equipment complies with requirements for Class I or Class II equipment while connected to supply mains, and with requirements for internally powered equipment when not connected		Pass
14.6c	Applied parts intended for direct cardiac application are of type CF	No applied parts.	N/A

15	**LIMITATION OF VOLTAGE AND/OR ENERGY**		N/A
15b	Voltage measured one sec after disconnection of the mains plug does not exceed 60V	Evaluated as a part of power supply	N/A
15c	For live parts accessible after equipment has been de-energized the residual voltage does not exceed 60 V nor residual energy exceed 2 mJ		N/A
	Marking provided for manual discharging		N/A

IEC 60601			
Clause	Requirement + Test	Result - Remark	Verdict

16	**ENCLOSURES AND PROTECTIVE COVERS**		Pass
16a	Equipment enclosed to protect against contact with live parts, and with parts which can become live (finger, pin, hook test)		Pass
	Insertion or removal of lamps - protection against contact with live parts provided	No removal lamp	N/A
16b	Opening in a top cover positioned that accessibility of live parts by a test rod is prevented	See table 56.1 (critical component table) for detail information.	Pass
16c	Conductive parts accessible after the removal of handles, knobs, levers		N/A
	- have a resistance of not more than 0.2 Ohm		N/A
	- separated from live parts by one of the means described in Sub-clause 17g		N/A
16d	Parts with voltage exceeding 25V a.c. or 60V d.c. which cannot be disconnected by external mains switch or plug protected against contact		N/A
16e	Removable enclosures protecting against contact with live parts		Pass
	- Removal possible only with the aid of a tool	Removable enclosure is clamped by screw.	Pass
	- Use of automatic device making parts not live when the enclosure is opened or removed		N/A
	- Exception 16e applied to the following parts..... :		N/A
16f	Openings for the adjustment of controls using a tool. The tool not able to touch basic insulation or any live parts	No such part	N/A

IEC 60601			
Clause	Requirement + Test	Result - Remark	Verdict

17	**SEPARATION**		Pass
17a	Separation method of the applied part from live parts:		N/A
	1) basic insulation: applied part earthed	No applied part	N/A
	2) by protectively earthed conductive part (e.g. screen)		N/A
	3) by separate earthed intermediate circuit limiting leakage current to applied part in event of insulation failure		N/A
	4) by double or reinforced insulation		N/A
	5) by protective impedances limiting current to applied part		N/A
	- Additional leakage current test in single fault conditions		N/A
17c	There is no conductive connection between applied parts and accessible conductive parts which are not protectively earthed	No applied part.	N/A
17d	Supplementary insulation between hand-held flexible shafts and motor shafts (Class I)	No such parts.	N/A
17g	Separation method of accessible parts other than applied parts from live parts:		Pass
	1) basic insulation: accessible part earthed		Pass
	2) by protectively earthed conductive part (e.g. screen)		N/A
	3) by separate earthed intermediate circuit limiting leakage current to enclosure in event of insulation failure		N/A
	4) by double or reinforced insulation		Pass
	5) by protective impedances limiting current to accessible part		N/A
	- Additional leakage current test in single fault conditions	(see appended table 19)	Pass
17h	Arrangements used to isolate defibrillation-proof applied parts so designed that:		N/A
	- no hazardous electrical energies appear during a discharge of a cardiac defibrillator	No such function	N/A
	- after exposure to the defibrillation voltage, the equipment continues to perform its intended function		N/A

IEC 60601			
Clause	Requirement + Test	Result - Remark	Verdict
18	**PROTECTIVE EARTHING, FUNCTIONAL EARTHING AND POTENTIAL EQUALIZATION**		Pass
18a	Accessible parts of Class I equipment separated from live parts by basic insulation connected to the protective earth terminal		Pass
18b	Protective earth terminals suitable for connection to the protective earth conductor		Pass
18e	Potential equalization conductor		N/A
	- Readily accessible	No Potential equalization	N/A
	- Accidental disconnection prevented in normal use		N/A
	- Conductor detachable without the use of a tool		N/A
	- Power supply cord does not incorporate a potential equalization conductor		N/A
	- Connection means marked with Symbol 9, Table DI		N/A
18f	For equipment without power supply cord, impedance between protective earth terminal and accessible metal part <= 0.1 Ohm	(see appended table 18)	Pass
	- For equipment with an appliance inlet, impedance between protective earth contact and any accessible metal part <= 0.1 Ohm		Pass
	- For equipment with a non-detachable power supply cord, impedance between protective earth pin in mains plug and accessible metal part <= 0.2 Ohm		N/A
18g	If the impedance of protective earth connections other than in Cl. 18 f) exceeds 0.1 Ohm, the allowable value of the enclosure leakage current is not exceeded in single fault condition		N/A
18k	Functional earth terminal not used to provide protective earthing		N/A
18l	Class II equipment with isolated internal screens		N/A
	- insulation of screens and all internal wiring connected to them is double insulation or reinforced insulation	Class I equipment	N/A
	- functional earth terminal clearly marked		N/A
	- explanation of functional earth terminal provided in the accompanying documents		N/A

IEC 60601			
Clause	Requirement + Test	Result - Remark	Verdict

19	**CONTINUOUS LEAKAGE CURRENTS AND PATIENT AUXILIARY CURRENTS**		Pass
19.1b	Leakage currents	(see appended table 19)	Pass
	- earth leakage current		Pass
	- enclosure leakage current		Pass
	- patient leakage current	No applied part.	N/A
	- patient auxiliary current		N/A

20	**DIELECTRIC STRENGTH**		Pass
	Overall compliance with Clause 20	(see appended table 20)	Pass

21	**MECHANICAL STRENGTH**		Pass
21a	Sufficient rigidity of an enclosure tested by: force of 45 N	(see appended table 21)	Pass
21b	Sufficient strength of an enclosure tested by: impact hammer	(see appended table 21)	Pass
21c	On portable equipment carrying handles or grips withstand the requirements of the loading test	No handles provided.	N/A
21.3	No damage to parts of patient support and/or immobilization system after the loading test	No patient support and/or immobilization system.	N/A
21.5	Hand held equipment or equipment parts are safe after drop test	Not hand-held equipment.	N/A
21.6	Portable and mobile equipment is able to withstand rough handling	(see appended table 21)	Pass

IEC 60601			
Clause	Requirement + Test	Result - Remark	Verdict

22	**MOVING PARTS**		N/A
22.2a	Moving parts of a transportable equipment are provided with guards which form an integral part of the equipment		N/A
22.2b	Moving parts of a stationary equipment are provided with similar guards as above, unless it is evident that equivalent protection is separately provided during installation		N/A
22.3	Cords (ropes), chains and bands are provided with guides to prevent them from running off or from jumping out of their guiding devices		N/A
	Guides or other safeguards are removable only with a tool		N/A
22.4	Dangerous movements of equipment parts, which may cause physical injury to the patient, are possible only by the continuous activation by the operator		N/A
22.6	Parts of equipment subject to mechanical wear are accessible for inspection		N/A
22.7	Means provided for emergency switching of an electrically produced mechanical movement which could cause a safety hazard		N/A
	The means for emergency switching is readily identifiable and accessible and does not introduce a further safety hazard		N/A
	Devices for emergency stopping able to break the full load current of the relevant circuit, taking into account possible stalled motor currents		N/A
	Means for stopping of movements operate as a result of one single action		N/A

23	**SURFACES, CORNERS AND EDGES**		Pass
	Rough surfaces, sharp corners and edges which may cause injury or damage avoided or covered	The edges are well rounded.	Pass

IEC 60601			
Clause	Requirement + Test	Result - Remark	Verdict

24	**STABILITY IN NORMAL USE (see appended table 24)**		Pass
24.1	Equipment does not overbalance during normal use when tilted through an angle of 10°	(see appended table 24)	Pass
24.3	Equipment overbalances when tilted through an angle of 10°		N/A
	- does not overbalance when tilted through an angle of 5° in any position excluding transport		N/A
	- carry a warning notice stating that transport should only be undertaken in a certain position		N/A
	- in the position specified for transport does not overbalance when tilted to an angle of 10°		N/A
24.6a	Equipment or its parts with a mass of more than 20 kg is provided with:		N/A
	- suitable handling devices (grips etc.), or		N/A
	- instructions for lifting and handling during assembly		N/A
24.6b	On portable equipment with a mass of more than 20 kg carrying handle(s) is (are) so situated that equipment may be carried by 2 or more persons	Mass of Unit with base is 4.7 kg < 20 kg.	N/A

25	**EXPELLED PARTS**		N/A
25.1	Protective means are provided where expelled parts of the equipment could be a hazard	No expelled part	N/A
25.2	Display vacuum tubes with a face dimension exceeding 16 cm are provided with adequate protection against implosion		N/A

IEC 60601			
Clause	Requirement + Test	Result - Remark	Verdict

28	**SUSPENDED MASSES**		N/A
28.3	Suspension system with safety device		N/A
	Safety device provided where the integrity of a suspension depends on parts which may have hidden defects, or on parts having safety factors not complying with Sub-clause 28.4	No such function	N/A
	Safety device has safety factors complying with Sub-clause 28.4.2		N/A
	Clear indication to the operator that the safety device has been activated after failure of suspension means		N/A
28.4	Suspension systems of metal without safety devices		N/A
	1) Total load does not exceed the safe working load		N/A
	2) Safety factors not less than 4 where it is unlikely that supporting characteristics will be impaired	(see appended table of additional tests)	N/A
	3) Safety factors not less than 8 where impairment is expected		N/A
	4) Safety factors multiplied by 1.5 for metal having an elongation at break of less than 5%		N/A
	5) Sheaves, sprockets, band wheels and guides so constructed that the safety factors maintained till replacement		N/A

29	**X-RADIATION**		N/A
29.2	EQUIPMENT not intended to produce X-radiation produces an exposure <= 130 nC/kg (0.5 mR)	Not X-ray equipment	N/A

36	**ELECTROMAGNETIC COMPATIBILITY**		N/A
	Equipment complies with IEC 601-1-2		N/A

37	**COMMON REQUIREMENTS FOR CATEGORY AP AND CATEGORY APG EQUIPMENT**		N/A
	Requirements for category AP and APG equipment (Cl. 37 - 41)	Not category AP or APG equipment.	N/A

IEC 60601			
Clause	Requirement + Test	Result - Remark	Verdict

42	**EXCESSIVE TEMPERATURES**		Pass
42.1	Equipment does not attain temperatures exceeding the values given in Table Xa over the range of ambient temperatures per Clause 10.2.1	(see appended table 42)	Pass
42.2	Equipment does not attain temperatures exceeding the values given in Table Xb at 25°C ambient	(see appended table 42)	Pass
42.3	Applied parts not intended to supply heat have surface temperatures not exceeding 41°C	No applied part.	N/A
42.5	Guards to prevent contact with hot surfaces removable only with a tool	No hot accessible surface	N/A

43	**FIRE PREVENTION**		Pass
	Strength and rigidity necessary to avoid a fire hazard	The equipment is well constructed with regard to avoid fire hazard.	Pass

44	**OVERFLOW, SPILLAGE, LEAKAGE, HUMIDITY, INGRESS OF LIQUIDS, CLEANING, STERILIZATION AND DISINFECTION**		Pass
44.2	Equipment contain a liquid reservoir:		N/A
	- the equipment is electrically safe after 15% overfill steadily over a period of 1 min	Unit is IPX0 equipment and no liquid reservoir.	N/A
	- transportable equipment is electrically safe after additionally having been tilted through an angle of 15° in the least favorable direction(s) (if necessary with refilling)		N/A
44.3	Electrical properties of the equipment do not change in connection of spillage test (200 ml of water)		N/A
44.4	Liquid which might escape in a single fault condition does not wet parts which may cause a safety hazard		N/A
44.5	Equipment sufficiently protected against the effects of humidity	(see appended table 44)	Pass
44.6	Enclosures designed to give a protection against harmful ingress of water classified according to IEC Publication 529		N/A
44.7	Equipment capable of withstanding cleaning, sterilization or disinfection without deterioration of safety provisions	(see appended table 44)	Pass

IEC 60601			
Clause	Requirement + Test	Result - Remark	Verdict

45	**PRESSURE VESSELS AND PARTS SUBJECT TO PRESSURE**		N/A
45.2	Pressure vessel with pressure volume greater than 200 kPa x l and pressure greater than 50 kPa withstand the hydraulic test pressure	No pressure vessel and no parts subject to pressure.	N/A
45.3	Maximum pressure does not exceed the maximum permissible working pressure for individual parts		N/A
45.7	Unless excessive pressure can not occur, pressure-relief device provided		N/A
45.7a	a) Pressure-relief device connected as close as possible to the pressure vessel		N/A
45.7b	b) Readily accessible for inspection		N/A
45.7c	c) Not capable of being adjusted or rendered inoperative without a tool		N/A
45.7d	d) Discharge opening located that the released material is not directed towards person		N/A
45.7e	e) Discharge opening located that operation will not deposit material which may cause a safety hazard		N/A
45.7f	f) Adequate discharge capacity to ensure pressure does not exceed the maximum permissible working pressure		N/A
45.7g	g) No shut-off valve between a pressure-relief device and the parts intended to be protected		N/A
45.7h	h) Minimum number of cycles of operation: 100.000		N/A

48	**BIOCOMPATIBILITY**		N/A
	Parts of equipment and accessories intended to come into contact with biological tissues, cells or body fluids are evaluated in accordance with ISO 10993-1		N/A

IEC 60601			
Clause	Requirement + Test	Result - Remark	Verdict

49	**INTERRUPTION OF THE POWER SUPPLY**		Pass
49.1	Thermal cut-outs and over-current releases with automatic resetting not used if they may cause a safety hazard	Evaluated as a part of power supply	N/A
49.2	Interruption and restoration of power supply does not result in a safety hazard other than interruption of intended function	(see appended table of additional tests)	Pass
49.3	Means are provided for removal of mechanical constraints on patient in case of a supply mains failure		N/A

51	**PROTECTION AGAINST HAZARDOUS OUTPUT**		N/A
51.4	Equipment furnishing both low-intensity and high-intensity outputs provided with means minimizing possibility of a high intensity output being selected accidentally	Evaluated as a part of power supply	N/A

IEC 60601			
Clause	Requirement + Test	Result - Remark	Verdict

52	**ABNORMAL OPERATION AND FAULT CONDITIONS**		Pass
52.1	Equipment is so designed and manufactured that even in single fault condition no safety hazard as described under 52.4 exists (see 3.1 and Cl. 13)	Both normal and single fault condition considered.	Pass
	The safety of equipment incorporating programmable electronic systems is checked by applying IEC 601-1-4	Not evaluated by Underwriters Laboratories Inc.	N/A
52.5.2	Failure of thermostats presents no safety hazards	Evaluated as a part of power supply	N/A
52.5.3	Short-circuiting of either part of double insulation presents no safety hazard		N/A
52.5.5	Impairment of cooling: temperatures not exceeding 1.7 times the values of Clause 42 minus 17.5°C	(see appended table 52)	Pass
52.5.6	Locking of moving parts presents no safety hazard	No moving part	N/A
52.5.7	Interruption and short-circuiting of motor capacitors presents no safety hazard	No motor provided.	N/A
52.5.8	Duration of motors locked rotor test in compliance with Cl. 52.5.8	No motor provided.	N/A
52.5.9	Failure of one component at a time presents no safety hazard	Evaluated as a part of power supply	N/A
52.5.10	Overload of heating elements presents no safety hazard		N/A
52.5.10f	Motors intended to be remotely controlled, automatically controlled, or liable to be operated continuously provided with running overload protection	No motor provided.	N/A
52.5.10h	Equipment with three-phase motors can safely operate with one phase disconnected	No motor provided.	N/A

IEC 60601			
Clause	Requirement + Test	Result - Remark	Verdict
56	**COMPONENTS AND GENERAL ASSEMBLY**		Pass
	List of critical components	(see appended table 56.1)	Pass
56.1b	Ratings of components not in conflict with the conditions of use in equipment		Pass
	Ratings of mains components are identified		Pass
56.1d	Components, movements of which could result in a safety hazard mounted securely	Components were clamped by soldering and screws.	Pass
56.1f	Conductors and connectors secured and/or insulated to prevent accidental detachment resulting in a safety hazard	Components were clamped by soldering and screws.	Pass
56.3a	Connectors provide separation required by Sub-clause 17g		Pass
	Plugs for connection of patient circuit leads can not be connected to other outlets on the same equipment	No patient circuit.	N/A
	Medical gas connections not interchangeable	No medical gas connections.	N/A
56.3b	Accessible metal parts can not become live when detachable interconnection cord between different parts of equipment is loosened or broken	(see appended table 19)	Pass
56.3c	Leads with conductive connection to a patient are constructed such that no conductive connection remote from the patient can contact earth or hazardous voltages.	No such connector	N/A
56.4	Connections of capacitors		N/A
	Not connected between live parts and non-protectively earthed accessible parts	Evaluated as a part of power supply	N/A
	If connected between mains part and protectively earthed metal parts comply with: IEC Publication 384-14		N/A
	Enclosure of capacitors connected to mains part and providing only basic insulation, is not secured to non-protectively earthed metal parts		N/A
	Capacitors or other spark-suppression devices are not connected between contacts of thermal cut-outs		N/A
56.5	Protective devices which cause disconnection from the supply mains by producing a short-circuit not provided in equipment	Not fitted with protective devices	N/A
56.6	Temperature and overload control devices		N/A
56.6a	Thermal cut-outs which have to be reset by a	Evaluated as a part of power	N/A

IEC 60601			
Clause	Requirement + Test	Result - Remark	Verdict
	soldering not fitted in equipment	supply	
	Thermal safety devices provided where necessary to prevent operating temperatures exceeding the limits	Thermal safety devices not provided.	N/A
	Audible warning provided where the loss of function caused by operation of a thermal cut-out presents a safety hazard	No audible warning provided.	N/A
	Self-resetting thermal cut-outs and self-resetting over-current releases operated 200 times		N/A
	Non-self resetting over-current releases operated 10 times	No such device provided.	N/A
	Independent non-self-resetting thermal cut-out provided where a failure of a thermostat could constitute a safety hazard		N/A
56.6b	Thermostats with varying temperature settings clearly indicated	No thermostats provided.	N/A
	Operating temperature of thermal cut-outs indicated		N/A
56.7	Batteries		Pass
56.7a	Battery compartments:		Pass
	- adequately ventilated	Product with certificated RTC battery	N/A
	- accidental short-circuiting is prevented		N/A
56.7b	Incorrect polarity of connection prevented	(see appended table Additional Test)	Pass
56.8	Indicators - unless indication provided by other means (from the normal operation position), indicator lights are used (color see 6.7):		N/A
	- to indicate that equipment is energized		N/A
	- to indicate the operation of non-luminous heaters if a safety hazard could result		N/A
	- to indicate when output exists if a safety hazard could result		N/A
	- charging mode indicator provided		N/A
56.10	Actuating parts of controls	No such part	N/A
56.10b	Actuating parts are adequately secured to prevent them from working loose during normal use		N/A
	Controls are secured to prevent the movement relative to scale marking (safety related only)		N/A

IEC 60601			
Clause	Requirement + Test	Result - Remark	Verdict
	Detachable indicating devices are prevented from incorrect connection without the use of tool		N/A
56.10c	Stops are provided on rotating controls:		N/A
	- to prevent an unexpected change from maximum to minimum or vice versa where this could produce a safety hazard		N/A
	- to prevent damage to wiring		N/A
56.11	Cord-connected hand-held and foot-operated control devices		N/A
56.11a	Contain voltages not exceeding 25 V a.c. or 60 V d.c. and isolated from the mains part by Cl. 17g	No such part	N/A
56.11b	Hand-held control devices comply with the requirement and test of Sub-clause 21.5		N/A
	- Foot-operated control devices designed to support the weight of an adult human being		N/A
56.11c	Devices not change their setting when inadvertently placed		N/A
56.11d	Foot-operated control devices are at least IPX 1		N/A
	- For surgical use, electrical switching parts are IPX 8		N/A
56.11e	Adequate strain relief at the cord entry provided		N/A

IEC 60601			
Clause	Requirement + Test	Result - Remark	Verdict
57	**MAINS PARTS, COMPONENTS AND LAYOUT**		Pass
57.1	Isolation from supply mains		Pass
57.1a	Equipment provides means to isolate its circuits electrically from the supply mains on all poles simultaneously		Pass
	Means for isolation incorporated in equipment or, if external, specified in the accompanying documents		N/A
57.1d	Switches used to comply with Sub-clause 57.1a comply with the creepage distances and air clearances as specified in IEC Publication 328		N/A
57.1f	Mains switches not incorporated in a power supply cord	No mains switch	Pass
57.1h	Appliance couplers and flexible cords with mains plugs provide compliance with Sub-clause 57.1a		Pass
57.1m	Fuses and semiconductor devices not used as isolating devices		N/A
57.2	Mains connectors and appliance inlets		Pass
57.2e	Auxiliary mains socket-outlets on non-permanently installed equipment of a type that cannot accept a mains plug	No such outlet	N/A
57.2g	Unless functional earth needs to be provided, Class I appliance inlet is not used in Class II equipment	Class I Equipment with Class I Inlet	Pass
57.3	Power supply cords		Pass
57.3a	Not more than one connection to a particular supply mains	Adaptor with detachable power supply cord and this part was evaluated as part of power supply	Pass
	If alternative supply allowed, no safety hazards when more than one connection is made simultaneously	The unit can be used only with internal power source from Sinpro Electronic Co. Ltd., Model MBU60-105	N/A
	The mains plug has only one power supply cord		N/A
	Non-permanently connected equipment provided with power supply cord or appliance inlet	With a hospital grade power cord	Pass
57.3b	Power supply cords sufficiently robust to comply with the requirements of IEC 227, designation 53 and IEC 245, designation 53		Pass
	Polyvinyl chloride insulated power supply cords not used for equipment having external metal parts with a temperature exceeding 75°C		N/A

IEC 60601			
Clause	Requirement + Test	Result - Remark	Verdict
57.3c	Nominal cross-sectional area of conductors of power supply cords not less than in Table XV	Equipment use 18 AWG and Cross-sectional area of conductor of 18AWG is 0.823mm*mm > 0.75mm*mm	Pass
57.3d	Stranded conductors not soldered if fixed by any clamping means	Evaluated as a part of power supply cord	N/A
57.4	Connection of power supply cords		Pass
57.4a	Cord anchorages		N/A
	Equipment provided with power supply cords has cord anchorages such that the conductors are relieved from strain, including twisting	Power supply with detachable power cord	N/A
	Tying the cord into a knot or tying the ends with string not used		N/A
	Cord anchorages made of insulating material or metal insulated from unearthed accessible metal parts by supplementary insulation		N/A
	Cord anchorages made of metal provided with an insulating lining		N/A
	Clamping screws do not bear directly on the cord insulation		N/A
	Screws associated with cable replacement are not used to secure other components		N/A
	Conductors of the power supply cord arranged that the protective earth conductor is not subject to strain as long as the phase conductors are in contact with their terminals		N/A
57.4b	Power supply cord protected against excessive bending		N/A
57.4c	Adequate space inside equipment to allow the supply cable conductors to be introduced and connected		Pass
57.5	Mains terminal devices and wiring of mains part		Pass
	Mains connected equipment other than those with a detachable supply cord provided with mains terminals, where connections are made with screws, nuts or equally effective methods		Pass
	If a conductor breaks away, barriers are provided such that creepage distances and air clearances cannot be reduced		Pass
	Screws and nuts which clamp external conductors not serve to fix any other component		Pass

IEC 60601			
Clause	Requirement + Test	Result - Remark	Verdict
57.5b	Terminals closely grouped with any protective earth terminal		N/A
	Mains terminal devices accessible only with use of a tool		N/A
	Mains terminal devices located or shielded that, should a wire of a stranded conductor escape when the conductors are fitted, there is no risk of accidental contact		N/A
57.5c	Internal wiring not subjected to stress when the means for clamping the conductors are tightened or loosened		Pass
57.5d	Cord terminals not require special preparation of the conductor		N/A
57.6	Mains fuses and overcurrent releases		N/A
	Fuses or over-current releases provided accordingly for Class I and Class II	Unit with certificated Class I power supply and evaluated as a part of power supply	N/A
	Current rating of mains fuses and over-current releases such that they reliably carry the normal operating current		N/A
	Protective earth conductor not fused		N/A
	Neutral conductor not fused for permanently installed equipment	Transportable equipment.	N/A
57.8	Wiring of the mains part		Pass
57.8a	Individual conductor in the mains part with insulation not at least electrically equivalent to that of the individual conductors of flexible supply cords complying with IEC Publications 227 or 245, treated as bare conductor	Evaluated as a part of power supply	Pass
57.8b	Cross-sectional area of conductors up to protective device not less than the minimum required for the power supply cord	Equipment use 18 AWG and Cross-sectional area of conductor of 18AWG is 0.823mm*mm > 0.75mm*mm	Pass
	Cross-sectional area of other wiring and the sizes of tracks on printed wiring circuits sufficient to prevent any fire hazard		Pass
57.9	Mains supply transformers		Pass
57.9.1	Overheating	Evaluated as part of power supply	N/A
	External to the transformer protective devices connected in such a way that failure of any		N/A

IEC 60601			
Clause	Requirement + Test	Result - Remark	Verdict
	component cannot render the protective devices inoperative		
57.9.1a	Short-circuit of secondary windings not caused excessive temperature		N/A
57.9.1b	Overload of secondary windings not caused excessive temperature		N/A
57.9.2	The dielectric strength of the electrical insulation of a mains supply transformer such that it passes tests		N/A
57.9.4	Construction		Pass
57.9.4a	Separation of primary and secondary windings	Evaluated as part of power supply	Pass
	- separate bobbins or formers		N/A
	- one bobbin with insulating partition		N/A
	- one bobbin with concentric windings and having copper screen with a thickness of not less than 0.13 mm		N/A
	- concentrically wound on one bobbin with windings separated by double insulation		N/A
57.9.4c	Means provided to prevent displacement of end turns		N/A
57.9.4d	Insulated overlap of not less than 3 mm if a protective earthed screen has only one turn		N/A
57.9.4e	Insulation between the primary and secondary in transformers with double insulation		N/A
	- 1 insulation layer having a thickness of at least 1 mm		N/A
	- at least 2 insulation layers with a total thickness of at least 0.3 mm		N/A
	- three layers provided that each combination of two layers can withstand the dielectric strength test for reinforced insulation		N/A
57.9.4g	Exit of the wires of toroidal transformers provided with double sleeving complying with requirements for double insulation and having total thickness at least 0.3 mm extending at least 20 mm outside the winding		N/A
57.10	Creepage distances and air clearances		Pass
57.10a	Values: compliance with at least the values of Table XVI	See insulation diagram for detail.	Pass

IEC 60601			
Clause	Requirement + Test	Result - Remark	Verdict
	Creepage distances for slot insulation of motors at least 50% of the specified values	No motor	N/A
57.10b	Minimum creepage distances and air clearances in the mains part between parts of opposite polarity not required if short-circuiting does not produce a safety hazard		Pass
57.10c	Creepage distances or clearances of at least 4 mm are maintained between defibrillation-proof applied parts and other parts	No applied parts.	N/A
58	**PROTECTIVE EARTHING - TERMINALS AND CONNECTIONS**		Pass
58.1	Clamping means of the protective earth terminal		N/A
	Not be able to loosen without the aid of a tool		Pass
	Screws for internal earth connections are covered or protected against loosening from outside		Pass
58.7	Earth pin of the appliance inlet regarded as the protective earth terminal		Pass
58.8	The protective earth terminal not used for the mechanical connection or the fixing of any component not related to earthing		Pass
58.9	Where the protective earth connections are made via a plug or socket device the protective earth connection is made before and interrupted after the supply connections during connection and interrupting		Pass

IEC 60601			
Clause	Requirement + Test	Result - Remark	Verdict
59	**CONSTRUCTION AND LAYOUT**		Pass
59.1	Internal wiring		Pass
59.1a	Cables and wiring protected against contact with a moving part	No moving part or sharp edge	N/A
	Wiring having basic insulation only protected by additional fixed sleeving		Pass
	Components are not likely to be damaged in the normal assembly or replacement of covers		Pass
59.1b	Movable leads are not bent around a radius of less than five times the outer diameter of the lead	No such part	N/A
59.1c	Insulating sleeving adequately secured		Pass
	If the sheath of a flexible cable or cord is used as supplementary insulation it complies with requirements of IEC 227 and IEC 245 and dielectric test		N/A
	Conductors subjected to temperatures exceeding 70°C have an insulation of heat-resistant material		N/A
59.1d	Aluminum wires of less than 16 mm2 cross-section not used	No Aluminum wire	N/A
59.1f	Connecting cords between equipment parts considered as belonging to the equipment		Pass
59.2	Insulation		Pass
59.2b	Mechanical strength and resistance to heat and fires retained by all types of insulation	(see appended table of additional tests)	Pass
59.2c	Insulation not likely to be impaired by deposition of dirt or by dust resulting from wear of parts	Evaluated as part of power supply	Pass
	Parts of rubber resistant to ageing	No rubber provided.	N/A
59.3	Excessive current and voltage protection		Pass
	Internal electrical power source provided with device for protection against fire hazard		Pass
	Fuse elements replaceable without opening the enclosure fully enclosed in a fuseholder	Fuse can't be changed from external	N/A
	Protective devices between an isolated applied part and the body of the equipment do not operate below 500 V r.m.s.	No applied part.	N/A
59.4	Oil containers		N/A
	Oil containers adequately sealed	Not intend to use with oil	N/A
	Container allow for the expansion of the oil		N/A

IEC 60601			
Clause	Requirement + Test	Result - Remark	Verdict
	Oil containers in mobile equipment sealed to prevent the loss of oil during transport		N/A
	Partially sealed oil-filled equipment or equipment parts provided with means for checking the oil level		N/A

IEC 60601			
Clause	Requirement + Test	Result - Remark	Verdict

6.1	**TABLE: marking durability**	Pass
Marking tested		Remarks
--		--
supplementary information: The test can be waived due to a plastic film cover on Label.		

7	**TABLE: power input**					Pass
Operating condition	Voltage (V)	Frequency (Hz)	Current (A)	Power (W)	Remarks	
Maximum Normal Load	90	47	0.87	46	--	
Maximum Normal Load	100	47	0.8	46	Max acceptable value: 1.6 A	
Maximum Normal Load	240	47	0.45	47	Max acceptable value: 0.8 A	
Maximum Normal Load	264	47	0.41	47	--	
Maximum Normal Load	90	63	0.88	47	--	
Maximum Normal Load	100	63	0.8	47	Max acceptable value: 1.6 A	
Maximum Normal Load	240	63	0.42	46	Max acceptable value: 0.8 A	
Maximum Normal Load	264	63	0.4	46	--	
supplementary information: 1. The CUP of Product is Intel Celeron M600MHZ with 512K L2 Cache. 2. Four ports of type A in USB hub connected to 2.5W (5V * 0.5 A) impedance respectively. 3. The Unit is operated with simulated software to run the system in the maximum load. 4. The mains supply by internal power supply: Sinpro Electronic Co. Ltd., Model MBU60-105, input: 100-240 Vac, 47-63 Hz, 1.6-0.8 A.						

15b	**TABLE: residual voltage in attachment plug**										N/A
Voltage measured between:	Measurements [V]										Remarks
	1	2	3	4	5	6	7	8	9	10	
supplementary information:											

IEC 60601			
Clause	Requirement + Test	Result - Remark	Verdict

15c	**TABLE: residual voltage or energy in capacitors**					N/A
Capacitor and its location		Residual voltage (V)	Time after disconnection (s)	Capacitance value (µF)	Residual energy (mJ)	Remarks
supplementary information:						

17h1	**TABLE: defibrillation-proof applied parts**				N/A
Test Condition: Fig. 50 or 51	Accessible part of measurement:	Applied part with test voltage	Test voltage polarity	Measured voltage between Y1 and Y2 (mV)	Remarks
supplementary information:					

17h2	**TABLE: defibrillation-proof recovery time**			N/A
Applied part with test voltage	Test voltage polarity	Recovery time from accompanying documents (s)	Measured recovery time (s)	Remarks
supplementary information:				

18	**TABLE: protective earthing**			Pass
Test location	Test current (A)	Measured voltage (V)	Resistance (ohms)	Remarks
From G pin of applied inlet to metal chassis on VESA (part of PE)	40 A	0.48	0.008	2 min
supplementary information: --				

IEC 60601			
Clause	Requirement + Test	Result - Remark	Verdict

19	**TABLE: leakage current**				Pass
Type of leakage current and test condition (including single faults)		Supply voltage (V)	Supply frequency (Hz)	Measured max. value (μA)	Remarks
Figure 16, Earth Leakage		(V)	(Hz)	Before/After HUMIDITY (μA)	Limitation (uA)
ER, NC, S1 = 1, S5 = N		264	63	163.2/164.1	500
ER, NC, S1 = 1, S5 = R		264	63	152.9/153.2	500
ER, SFC (Neutral Open), S1 = 0, S5 = N		264	63	301.1/301.5	500
ER, SFC (Neutral Open), S1 = 0, S5 = R		264	63	298.7/298.9	500
Figure 18, Enclosure Leakage		(V)	(Hz)	Before/After Humidity (μA)	Limitation (uA)
EN, NC, S1 = 1, S5 = N, S7 = 1		264	63	9.6/9.6	MD1 between, 100
EN, NC, S1 = 1, S5 = R, S7 = 1		264	63	13.3/13.3	100
EN, SFC (Neutral Open), S1 = 0, S5 = N, S7 = 1		264	63	16.6/16.7	500
EN, SFC (Neutral Open), S1 = 0, S5 = R, S7 = 1		264	63	27.3/27.4	500
EN, SFC (Ground Open), S1 = 1, S5 = N, S7 = 0		264	63	163.7163.6	500
EN, SFC (Ground Open), S1 = 1, S5 = R, S7 = 0		264	63	153.7/153.8	500
EN, NC, S1 = 1, S5 = N, S7 = 1		264	63	15.4/15.5	MD2 between, 100
EN, NC, S1 = 1, S5 = R, S7 = 1		264	63	15.4/15.4	100
EN, SFC (Neutral Open), S1 = 0, S5 = N, S7 = 1		264	63	21.4/21.4	500
EN, SFC (Neutral Open), S1 = 0, S5 = R, S7 = 1		264	63	21.2/21.3	500
EN, SFC (Ground Open), S1 = 1, S5 = N, S7 = 0		264	63	16.4/16.5	500
EN, SFC (Ground Open), S1 = 1, S5 = R, S7 = 0		264	63	14.5/14.5	500
Figure 18, Enclosure Leakage with inverter high voltage to Ground short (metal enclosure)		(V)	(Hz)	BEFORE/ AFTER Humidity (μA)	Limitation (uA)
EN, NC, S1 = 1, S5 = N, S7 = 1		264	63	2.8/2.8	MD1 between, 100
EN, NC, S1 = 1, S5 = R, S7 = 1		264	63	2.7/2.7	100
EN, SFC (Neutral Open), S1 = 0, S5 = N, S7 = 1		264	63	3.1/3.0	500
EN, SFC (Neutral Open), S1 = 0, S5 = R, S7 = 1		264	63	3.2/3.2	500
EN, SFC (Ground Open), S1 = 1, S5 = N, S7 = 0		264	63	130.5/130.5	500
EN, SFC (Ground Open), S1 = 1, S5 = R, S7 = 0		264	63	90.2/90.3	500
EN, NC, S1 = 1, S5 = N, S7 = 1		264	63	2.4/2.4	MD2 between, 100
EN, NC, S1 = 1, S5 = R, S7 = 1		264	63	2.6/2.7	100

IEC 60601			
Clause	Requirement + Test	Result - Remark	Verdict

EN, SFC (Neutral Open), S1 = 0, S5 = N, S7 = 1	264	63	2.9/2.9	500
EN, SFC (Neutral Open), S1 = 0, S5 = R, S7 = 1	264	63	2.8/2.8	500
EN, SFC (Ground Open), S1 = 1, S5 = N, S7 = 0	264	63	8.0/8.1	500
EN, SFC (Ground Open), S1 = 1, S5 = R, S7 = 0	264	63	13.5/13.5	500
Figure 18, Enclosure Leakage in Single Fault condition (CN1 Pin2 to Earth (metal enclosure), R7 Short)	(V)	(Hz)	BEFORE/ AFTER Humidity (μA)	Limitation (uA)
EN, SFC, S1 = 1, S5 = N, S7 = 1	264	63	2.8/2.8	MD1 between, 500
EN, SFC, S1 = 1, S5 = R, S7 = 1	264	63	3.0/3.1	500
EN, SFC, S1 = 1, S5 = N, S7 = 1	264	63	3.1/3.1	MD2 between, 500
EN, SFC, S1 = 1, S5 = R, S7 = 1	264	63	2.9/2.9	500

supplementary information:

1. MD1 was connected between earth and metal enclosure of enclosure. 2. MD2 was connected between metal enclosure of enclosure and plastic enclosure parts 3. Put in chamber (25℃/93%RH) started 2008-08-11 13:30 to 2008-08-13 13:30

ER - Earth leakage current
EN - Enclosure leakage current
P - Patient leakage current
PM - Patient leakage current with mains on the applied parts
PA - Patient auxiliary current
Fig. 15 - refers to Fig. 15 in IEC601-1
MD - Measuring device

A - After humidity conditioning
B - Before humidity conditioning
1 - Switch closed or set to normal polarity
0 - Switch open or set to reversed polarity
NC - Normal condition
SFC - Single fault condition

IEC 60601			
Clause	Requirement + Test	Result - Remark	Verdict

20	**TABLE: dielectric strength**				Pass
Insulation under test (area from insulation diagram)	Insulation type: (OP-operational / BI-basic / SI-supplementary / DI-double / RI-reinforced)	Reference voltage (V)	Test voltage (V)	Remarks	
Appliance inlet (L, N) to VESA metal part, Area D	BI	250	1500Vac	No breakdown	
Mylar (provided on power supply), Area D	BI	250	1500 Vac	No breakdown	
Power supply primary to secondary, Area B	DI/ RI	363	4452 Vac	No breakdown	
Appliance inlet (L, N) to plastic enclosure, Area C	DI/RI	250	4000 Vac	No breakdown	
Appliance inlet (L, N) to SIP/SOP, Area F	DI/RI	250	4000 Vac	No breakdown	
supplementary information: 1. The mains of the product is supplied by a R/C internal power supply. Power supply working voltage between primary to secondary was 1024 Vpeak to peak. The test reference voltage for power supply is 1024/(2*1.414) < 363 Vac. 2. All tests were conducted before and after humidity. 3. Test duration from 2008-05-26 to 2008-05-28.					

21	**TABLE: mechanical strength**		Pass
Part under test	Test (impact, drop, force, handle, rough handling, mobile)	Remarks	
Front, side, Rear of the Unit	Force Test (Clause 21a)/ 45N	Intact	
Unit	Rough Handling - Drop (Clause 21.6) / Testing height = 5 cm	Intact	
supplementary information: 1. Clause 21b: The impact energy of ball drop test is 5 J and the energy is much severe than impact test, therefore impact test can be waived. 2. Clause 21.6: The weight of the Unit with stand = 4.7 Kg.			

24	**TABLE: - stability**		Pass
Part under test	Test condition	Remarks	
The Unit with stand	The unit was place on plane inclined 10° from the horizontal	Intact	
supplementary information: --			

IEC 60601			
Clause	Requirement + Test	Result - Remark	Verdict

29	**TABLE: X - radiation**			N/A
Part under test	Test condition	Measured radiation (mR)	Remarks	
supplementary information:				

IEC 60601			
Clause	Requirement + Test	Result - Remark	Verdict

42	**TABLE: normal temperature**		Pass
Supply voltage: See below Ambient temperature: See below	Test Condition: See below		
Measuring location		Measured temperature (°C)	Remarks
Supply Voltage / Frequency: 90V/ 50 Hz		--	Normal Condition
1. Power supply transformer coil		76/ 93	120
2. Power supply transformer core		74/ 91	120
3. AC connector to connector (P1) of power supply		43/ 60	125
4. Inverter transformer (T1) coil		60/ 77	130
5. Inverter transformer (T1) core		60/ 77	130
6. Inverter PWB near T1		75/ 92	105
7. Inverter chock (L1)		75/ 92	105
8. Heatsink on CPU (U13 and U20)		47/ 64	--
9. Mainboard Chock (L1) coil		53/ 70	105
10. Mainboard Chock (L2) coil		55/ 72	105
11. PWB of Mainboard near the inverter and near CPU		57/ 74	105
12. Heatsink on PWB between VL1 and VL2 Chenchen Lee 2008-05-22		70/ 87	105
13. HDD		53/ 70	105
14. Front panel		36/ 53	85
15. Plastic enclosure inside (near Power)		38/ 55	80
16. Plastic enclosure outside (near Power)		35/ 52	80
17. Metal enclosure (for VESA mount) outside		41/ 58	60
18. Metal connector		37/ 54	60
19. Indicator light outer surface		30/ 47	--
20. Ambient		23/ 40	--
Supply Voltage / Frequency: 264V/ 60 Hz		--	--
1. Power supply transformer coil		81/ 98	120
2. Power supply transformer core		79/ 96	120
3. AC connector to connector (P1) of power supply		42/ 59	125
4. Inverter transformer (T1) coil		59/ 78	130
5. Inverter transformer (T1) core		59/ 78	130
6. Inverter PWB near T1		75/ 92	105
7. Inverter chock (L1)		75/ 92	105
8. Heatsink on CPU (U13 and U20)		47/ 64	--
9. Mainboard Chock (L1) coil		53/ 70	105
10. Mainboard Chock (L2) coil		55/ 72	105
11. PWB of Mainboard near the inverter and near CPU		56/ 73	105
12. Heatsink on PWB between VL1 and VL2 Chenchen Lee 2008-05-22		70/ 87	105
13. HDD		53/ 70	105
14. Front panel		35/ 52	85
15. Plastic enclosure inside (near Power)		38/ 55	80, max plastic enclosure temperature

IEC 60601			
Clause	Requirement + Test	Result - Remark	Verdict

16. Plastic enclosure outside (near Power)	35/ 52	80
17. Metal enclosure (for VESA mount) outside	41/ 58	60
18. Metal connector	36/ 53	60
19. Indicator light outer surface	30/ 47	--
20. Ambient	23/ 40	--
Supply Voltage / Frequency: 240 V/ 60 Hz	--	Test Condition: Block all openings
1. Power supply transformer coil	88/ 105	175
2. Power supply transformer core	86/ 103	175
3. AC connector to connector (P1) of power supply	53/ 70	182.5
4. Inverter transformer (T1) coil	65/ 82	175
5. Inverter transformer (T1) core	65/ 82	175
6. Inverter PWB near T1	81/ 98	161
7. Inverter chock (L1)	81/ 98	161
8. Heatsink on CPU (U13 and U20)	54/ 71	--
9. Mainboard Chock (L1) coil	61/ 78	161
10. Mainboard Chock (L2) coil	62/ 79	161
11. PWB of Mainboard near the inverter and near CPU	65/ 82	161
12. Heatsink on PWB between VL1 and VL2 Chenchen Lee 2008-05-22	77/ 94	105
13. HDD	60/ 77	161
14. Front panel	41/ 58	127
15. Plastic enclosure inside (near Power)	45/ 62	118.5
16. Plastic enclosure outside (near Power)	41/ 58	118.5
17. Metal enclosure (for VESA mount) outside	47/ 64	84.5
18. Metal connector	43/ 60	84.5
19. Indicator light outer surface	34/ 51	--
20. Ambient	23/ 40	--
Supply Voltage / Frequency: 264V/ 63 Hz	--	--
1. Power supply transformer coil	80/95	120
2. Power supply transformer core	78/93	120
3. AC connector to connector (P1) of power supply	46/61	125, max AC connector temperature
4. Inverter transformer (T1) coil	63/78	130
5. Inverter transformer (T1) core	61/76	130
6. Inverter PWB near T1	73/88	105
7. Inverter chock (L1)	75/90	105
8. Heatsink on CPU (U13 and U20)	48/63	--
9. Mainboard Chock (L1) coil	55/70	105
10. Mainboard Chock (L2) coil	56/71	105
11. PWB of Mainboard near the inverter and near CPU	52/67	105
12. PWB between VL1 and VL2	72/87	105
13. HDD	54/69	105
14. Front panel	39/54	85
15. Plastic enclosure inside (near Power)	40/55	80
16. Plastic enclosure outside (near Power)	38/53	80
17. Metal enclosure (for VESA mount) outside	43/58	60

IEC 60601			
Clause	Requirement + Test	Result - Remark	Verdict

18. Metal connector	40/55	60
19. Indicator light outer surface	33/48	--
20. Ambient	25/40	--
COR - indicates measurements taken using change-of-resistance method		

supplementary information:

1. See input test for the information of maximum load condition. 2. Compare the result of 90V/50Hz and 264V/60Hz, the highest temperature was happened at higher voltage: 264V/60Hz, therefore the temperature test at high voltage was treated as worst condition. 3. The mains of product was provided with internal switching power supply, and the according of testing result of temperature tests at 264Vac/60Hz (provide in datasheet 1) and 264Vac/63Hz (provided in datasheet 2), the frequency was not affected the result of temperature, therefore the product was tested at conduction of 264/60Hz for test related to temperature test.

44	**TABLE: overflow, spillage, leakage, humidity, ingress of liquids, cleaning, sterilization, desinfection**	Pass
Test type and condition	Part under test	Remarks
Clause 44.5: 25 degree C, 93 %RH, 48 h	Unit	No breakdown
Clause 44.7: Follow the cleaning method inside the accompany document	Unit	No breakdown

supplementary information:

1. For clause 44.5: :25 degree C/93%RH 48h; then put into chamber at 2008-05-26 14:30; out of chamber at 2008-05-28 14:30. 2. For clause 44.7: Testing liquid_ ethanol, water; Using ethanol with soft cloth to clean the enclosure of the product.

45	**TABLE: hydrostatic pressure and pressure-relief device cycling test**		N/A
Test type and condition	Part under test	Test pressure	Remarks

supplementary information:

IEC 60601			
Clause	Requirement + Test	Result - Remark	Verdict

52	**TABLE: abnormal operation**		Pass
Test type, condition and clause reference		Observed results	Remarks
Impairment of Cooling (Block opening) (52.5.5)		At ambient 40 degree C. Power supply: transformer coil= 105 degree C; transformer core= 103 degree C. Inverter: transformer coil= 82 degree C; transformer core= 82 degree C.	See table 42 for details
supplementary information: --			

IEC 60601			
Clause	Requirement + Test	Result - Remark	Verdict

56.1	**TABLE: list of critical components**					Pass
Object/part No.	Manufacturer/ trademark	type/model	technical data	Product Category CCN(s)	Required Marks of Conformity	Photo ID, Item # or other sorting identifier
01. Internal power adapter	Sinpro Electronic Co.Ltd	MBU60-105	I/P: 100-240 Vac, 47-63 Hz, 1.6-0.8 A; O/P: 12 Vdc, 5.25 A, Class I.	QQHM2/8	UL/ cUL	3-04
01-1. Mylar for adaptor	Various	Various	V-2 minimum, see Enclosure 4-08 for dimension	QMFZ2	UL	4-08
02. Power supply cord	Various	Various	Listed, Hospital Grade, min 18 AWG, Type SJE, SJT, SJO or equivalent or better, minimum 125Vac, 10A, with NEMA 5-15P or 250V, 10A, with NEMA 6-15P. .	ELBZ	UL	
03. Appliance AC inlet	Supercom Wire & Cable Co Ltd	SC-8	15A, 250Vac, 3- pin	AXUT2	UL	3-05
03-2. Insulation Tubing/Sleeving	Various	Various	FEP, PTFE, PVC, TFE, neoprene, polyamide or marked VW-1; min 105 degree C, min 300 V	UZFT2, YDPU2, YDTU2	UL	3-05
04. LCD panel	Chi Mei	G121SX-XXX, where X may be 0-9, A-Z or blank	12.1" TFT-LCD Type. Max rating: 0.835 A, 5.5 Vdc.	NWGQ2/8	UL/cUL	4-10
04a. Touch panel	Higgstec Inc	HT-121F-5RB-014N-18R-200FH	12.1" TFT-LCD Module SVGA Max rating: 3.3V~ 5.5V 1.5A.	--	--	
05. DC/AC Inverter	HWA YOUN CO., LTD	QF82V4.12S	I/P: 12 Vdc, 0.78 A; O/P: 450 V, 6mA.	--	--	3-07
05-1. DC/AC Inverter - Transformer (T1, T2)	--	--	130 degree C	--	--	
05-1-1. DC/AC Inverter_ Transformer _ Coil (T1, T2)	Various	Various	Copper magnet wire, 130 degree C	OBMW2	UL	

IEC 60601			
Clause	Requirement + Test	Result - Remark	Verdict

05-1-2. DC/AC Inverter_ Transformer_ Core (T1, T2)	--	--	Ferrite, overall 15 by 15 by 4.65 mm	--	--	
05-1-3. DC/AC Inverter_ Transformer _ Bobbin (T1, T2)	Sumitomo Chemical Co., Ltd.	LCP E4008	Liquid Crystal Polymer; V-0, minimum 0.5 mm thick, 130 degree C	QMFZ2/8	UL/cUL	4-06
05-2. DC/AC Inverter _Mylar Sheet	Various	Various	V-2 minimum, see Enclosure 4-07 for dimension	QMFZ2	UL	4-07
06. Enclosure	Teijin Chemicals Ltd Research & Development Div	MN-3500	V-0 for all color, overall dimension see Enclosure 4-01 for details, 1 mm thickness minimum, 80 degree C	QMFZ2	UL	4-01
06-1. Enclosure-Opening	--	--	Each opening: 20mm *3 mm; See Enclosure 4-01 for details	--	--	4-01
06-2. Enclosure-metal part	--	--	See Enclosure 4-02 for details	--	--	4-02
07. PWB	Various	Various	V-0 or better, 105 degree C minimum	ZPMV2/8	UL	
08. Internal Wiring, internal secondary ELV/SELV circuits	Various	Various	FEP, PTFE, PVC, TFE, neoprene, polyimide or marked VW-1; min 30V, 80 degree C	AVLV2/8	UL	3-05
08-1. Interconnecting Cable	Various	Various	60 degree C minimum, 60 V minimum, 3.05 m long maximum, jacketed, VW-1 or FT-1.	AVLV2	UL	3-05
08-2. Primary connector (connector to internal power adaptor)	Ever-Conn Industrial Co Ltd	8673	250V, 5A	ECBT2	UL	3-05
08-3. Connectors and Receptacles (secondary ELV/SELV circuits)	Various	Various	SELV, VGA port, DVI port, USB port and DC connector	ECBT2, RTRT2	UL	3-05
09. Stand (Optional)	--	--	Material: Aluminum; weight 779g; See enclosure 4-04	--	--	4-04

IEC 60601			
Clause	Requirement + Test	Result - Remark	Verdict

10. Internal Chassis	--	--	Material: SGCC/SPCC; Min thickness: 1mm, see enclosure 4-02 for details.	--	--	4-02
11. Hard disk drive	Various	Various	Generic, maximum 5Vdc, maximum 1.5A.	NWGQ2	UL	3-05
12. Heatsink of CPU (U13 and U20)	--	--	Material: Aluminum, see enclosure 4-09 for details.	--	--	4-09
12-1. Internal silicon (use on Heatsink of CPU)	Various	Various	V-2 minimum, overall 20 mm by 20 mm, min thickness 1.0mm	QMFZ2/8	UL/cUL	3-05
13. RTC Battery	Matsushita Electric Industrial Co., Ltd. Panasonic Corp Of North America	CR2032	3V, abnormal charging current 10 mA.	BBCV2	UL	3-05
14. Protect IC	Micrel Inc	MIC2026	5.5Vdc, 0.5A	QVGS2	UL	3-05
15. Label	Seimo Printed Co.,Ltd	SE-02	60 degree C	PGDQ2	UL	7-01

IEC 60601			
Clause	Requirement + Test	Result - Remark	Verdict

56.10	**TABLE: actuating parts and controls**	N/A
Part under test	Torque applied	Remarks
supplementary information:		

56.11b	**TABLE: foot operated control devices-loading**	N/A
Part under test	Observed results	Remarks
supplementary information:		

57.4	**TABLE: cord anchorages**			N/A
Cord under test	Mass of equipment	Pull	Torque	Remarks
supplementary information:				

57.4b	**TABLE: cord bending**		N/A
Cord under test	Test mass	Measured curvature	Remarks
supplementary information:			

IEC 60601			
Clause	Requirement + Test	Result - Remark	Verdict

57.9.1a	**TABLE: transformer short circuit**						N/A
Winding under test	Protection	Measured temperatures (°C)			Test duration	Remarks	
		Primary	Secondary	Ambient			
supplementary information:							

57.9.1b	**TABLE: overload**							N/A
Winding under test	Protection	Measured temperatures (°C)			Test duration	Test current or thermal cutout temp.	Remarks	
		Primary	Secondary	Ambient				
supplementary information:								

57.9.2	**TABLE: transformer dielectric strength**				N/A
Transformer under test	Test voltage applied to	Test voltage	Test frequency	Remarks	
supplementary information:					

IEC 60601			
Clause	Requirement + Test	Result - Remark	Verdict

	TABLE: additional tests		Pass
Clause	Test type and condition	Remarks and observed results	Verdict
UL60601	--	--	--
Clause 55 Mechanical abuse - ball drop test	Front, side and rear of the Unit	Intact	Pass
Clause 55 Mold stress relief test	The unit (MFR: Teijin Chemicals/ Model: MN-3500), 70 degree C, 7 h	Intact	Pass
Clause 49.2 Interruption of power supply	Interruption and restoration of power at 240Vac/60Hz	No safety hazard	Pass
Clause 56.7 Reversed battery connection	Reverse the RTC battery at 240Vac/60Hz / MFR: Matsushita Electric Industrial Co.; Model: CR2032	No safety hazard	Pass
59.2 Ball pressure	Plastic enclosure (MFR: Teijin Chemicals/ Model: MN-3500, thickness:1mm), 75 degree C, 1 h	0.8mm	Pass
--	AC connector on power supply, 125 degree C, 1 h	0.9mm	Pass
--	AC connector (MFR: Ever-Conn Industrial Co Ltd, Model: 8673; thickness:1mm), 125 degree C, 1h	1.2mm	Pass
UL 60950	--	--	--
Clause 2.4.1, 2.4.2 Limited current circuit measurem ents - Method I	Testing Location	--	--
User accessible live Part: CN1 Pin1 to CN1 Pin 2	Normal	Vpeak: 7.2 Vac; Peak current: 3.6 mA; Frequency: 51 KHz;	Pass
--	R1 shorted	Unit shutdown	Pass
--	R16 shorted	Vpeak: 8.6 Vac; Peak current: 4.3 mA; Frequency: 53 KHz;	Pass
--	R18 shorted	Unit shutdown	Pass

IEC 60601			
Clause	Requirement + Test	Result - Remark	Verdict
--	R12 shorter	Vpeak: 6.8 Vac; Peak current: 3.4 mA; Frequency: 52 KHz;	Pass
--	R7 shorter	Vpeak: 10.6 Vac; Peak current: 5.3 mA; Frequency: 51 KHz;	Pass
--	Q1 C-E shorter	Vpeak: 6.4 Vac; Peak current: 3.2 mA; Frequency: 51 KHz;	Pass
--	Q5 C-E shorter	Unit shutdown	Pass
User Accessible Live Part: CN1 Pin1 to Earth	Normal	Unit shutdown	Pass
--	R1 shorted	Unit shutdown	Pass
--	R16 shorted	Unit shutdown	Pass
--	R18 shorted	Unit shutdown	Pass
--	R12 shorter	Unit shutdown	Pass
--	R7 shorter	Unit shutdown	Pass
--	Q1 C-E shorter	Unit shutdown	Pass
--	Q5 C-E shorter	Unit shutdown	Pass
User Accessible Live Part: CN1 Pin2 to Earth	Normal	Vpeak: 7.6 Vac; Peak current: 3.8 mA; Frequency: 53 KHz;	Pass
--	R1 shorted	Unit shutdown	Pass
--	R16 shorted	Vpeak: 8.8 Vac; Peak current: 4.4 mA; Frequency: 51 KHz;	Pass
--	R18 shorted	Unit shutdown	Pass
--	R12 shorter	Vpeak: 6.4 Vac; Peak current: 3.2 mA; Frequency: 52 KHz;	Pass
--	R7 shorter	Vpeak: 10.8 Vac; Peak current: 5.4 mA; Frequency: 51 KHz;	Pass
--	Q1 C-E shorter	Vpeak: 6.2 Vac; Peak current: 3.1 mA; Frequency: 51 KHz;	Pass
--	Q5 C-E shorter	Unit shutdown	Pass
Clause 2.4.1, 2.4.2 Limited current circuit measurem ents - Method II	Testing location	--	--
User accessible live Part: CN1 Pin1 to CN1 Pin	Normal	Voltage: 780 Vac.	Pass

IEC 60601			
Clause	Requirement + Test	Result - Remark	Verdict
2			

supplementary information:

1. Clause 55 ball drop: Test height= 1.4 m with testing steel ball weight 0.5kg, total testing energy=6.82Nm > 6.78Nm. 2. Clause 55 mold stress relief: The max plastic enclosure temperature was 60 +10 = 70 degree C 3. Clause 59.2 ball pressure: put into oven at (a) The max plastic enclosure temperature was 60 < 75 degree C. (b) The max AC connector temperature was 55 < 125 degree C. (c) The max AC connector temperature on power supply (data from power supply report, E230351-A1) was 63.8 < 125 degree C. (d) Test period: - the product put in oven(75 degree C, 1 h) from 2008-05-27 1310 to 2008-05-27 1410 - AC connector on power supply put in oven(125 degree C, 1 h) from 2008-05-27 1650 to 2008-05-27 1750 - AC connector put in oven(125 degree C, 1 h) from 2008-05-27 1800 to 2008-05-27 1900

Enclosure
National Differences

Canada
USA

IEC 60601			
SubClause	Difference + Test	Result - Remark	Verdict

Canada - Differences to IEC 60601-1:1988 + A1:1991 + A2:1995			
6	Canadian difference to this clause no longer applicable		Pass
6.61	Point of connection of gas cylinders:		N/A
6.61	- is gas specific		N/A
6.61	- is non-interchangeable		N/A
6.61	- is identified		N/A
56.3a	Medical gas inlet connectors:		N/A
56.3a	- are gas specific		N/A
56.3a	- are non-interchangeable		N/A
56.3a	- are DISS type complying with CGA V-5		N/A
56.3a	- are configured to permit the supply from assemblies complying with CAN/CSA - Z5359-04 (replaces Z305.2)		N/A
56.6a	Where consequential loss of function caused by operation of a thermal cut-out presents a safety hazard, both visible and audible warnings provided		N/A
57.2g	Mains plug of non-permanent installed equipment:		Pass
57.2g	- if molded on type - hospital grade complying with CSA C22.2, No. 21	Detachable power cord	N/A
57.2g	- hospital grade disassembly type complying with CSA C22.2, No. 42	Hospital grade power supply cord	Pass
57.2g	- if Class II equipment - polarized hospital grade CSA configuration 1-15P	Class I equipment	N/A
57.3b	Detachable power supply cords:		Pass
57.3b	- unlikely to be detached accidentally	No hazard happened while interrupted power supply. (see appended table of additional tests)	Pass
57.3b	- impedance of earth contacts presents no safety hazard		Pass
57.3b	- possibility of replacement by a cord which could make equipment hazards minimized		N/A
57.3b	- complies with CSA C22.2 NO. 21		Pass
57.3b	- not smaller than No. 18 AWG		Pass
57.3b	- minimum serviceability of Type SJ for mobile	Type SJT or above	Pass

IEC 60601			
SubClause	Difference + Test	Result - Remark	Verdict
	equipment or Type SV for other		
57.9	Canadian difference to this clause no longer applicable		N/A
58.2	Canadian difference to this clause no longer applicable		N/A
59.1	Connecting cables comply with Canadian Electrical Code, Part I		Pass
60	Canadian difference to this clause no longer applicable	No applied part.	N/A

IEC 60601			
SubClause	Difference + Test	Result - Remark	Verdict

USA - Differences to IEC 60601-1:1988 + A1:1991 + A2:1995			
3.100.1a	Printed wiring boards comply with U.S. National or internationally harmonized component standards unless they are connected totally in a SELV circuit limited to 15 W, or less, maximum available power and whose failure will not result in a Safety Hazard.	PWB complies with U.S. National standards.	Pass
3.100.1b	Lithium batteries comply with U.S. National or internationally harmonized component standards	R/C Lithium batteries provided.	Pass
3.100.1c	Optical isolators comply with U.S. National or internationally harmonized component standards unless they are connected totally in a SELV circuit limited to 15 W, or less, maximum available power and whose failure will not result in a Safety Hazard.		N/A
3.100.1d	Wiring and tubing comply with U.S. National or internationally harmonized component standards unless they are connected totally in a SELV circuit limited to 15 W, or less, maximum available power and whose failure will not result in a Safety Hazard.	Wiring and tubing comply with U.S. National standards.	Pass
3.100.1e	CRT's > 5 inches comply with U.S. National or internationally harmonized component standards	No CRT provided.	N/A
3.101.1	Primary circuit components up to isolation transformer meet U.S. national or international harmonized component standards		Pass
6	a) All words except the signal words in "CAUTION", WARNING", and "DANGER" markings at least 1.6 mm (1/16 inch) high	Markings at least 1.6 mm (1/16 inch) high.	Pass
6	b) Signal words "CAUTION", WARNING", and "DANGER" at least 2.8 mm (7/64 inch)	Signal words at least 2.8 mm (7/64 inch) high.	Pass
6	c) Letters in contrast color to the background		Pass
6	Equipment capable of emitting ionizing radiation provided with warning statement	Not emits ionizing radiation.	N/A
6	If equipment produced in more than one factory, factory identification marked on the equipment		N/A
6	Multiple-voltage equipment intended for permanent connection marked with voltage for which it is connected when shipped	Not permanent connected.	N/A
6.2l	Statement for suitable wiring materials at temperatures over 60 ºC		N/A
6.6a	Identification of the content of gas cylinders in accordance with the color coding requirement of ANSI/NFPA99.		N/A

IEC 60601			
SubClause	Difference + Test	Result - Remark	Verdict
6.8	Cord-connected equipment provided with instructions to indicate type of attachment plug for alternate voltage	Power cord will be provided with the product.	Pass
10.2.2a	Rated voltage not exceeding 250 Vdc or single phase ac or 600 V polyphase ac for equipment up to 4kVA	100-240Vac, single phase	Pass
10.2.2a	Rated voltage not exceeding 600 V for all other equipment		N/A
14	Fixed equipment and permanent equipment is Class I	Not fixed equipment and permanent equipment	N/A
18m	Earthing of X-ray equipment: All parts operating at over 600 V ac, 850 V dc, or 850 V peak are enclosed in protectively earthed enclosures	Not X-ray equipment	N/A
18m	Earthing of X-ray equipment: Connections from high-voltage equipment to other high voltage components made with high voltage shielded cables		N/A
18n	Accessible non-current carrying conductive parts are protectively earthed		N/A
19	Enclosure and earth leakage currents comply with U.S. limits		Pass
22	When risk of injury can occur, end stops are provided	No moving part	N/A
22	End stops have mechanical strength as determined by the test		N/A
22.4	Dangerous movements of equipment parts which may cause physical injury to the patient or operator are possible only by the continuous activation by the operator		N/A
22.7a	Emergency off switch has red actuator		N/A
22.7a	Emergency off switch: once actuated, maintains the equipment in "off" condition until action, different from that used to actuate, is performed		N/A
22.7a	Emergency off switch is readily accessible to operator		N/A
22.7b	Emergency off switch is marked with word "STOP" or symbol 5110 of IEC 878 in compliance with U.S. Clause 6		N/A
22.7b	Emergency off switch: separate and independent of		N/A

IEC 60601			
SubClause	Difference + Test	Result - Remark	Verdict
	the intended movement control		
28.3	No evidence of damage to a safety catch after test		N/A
28.3	Safety catch marking provided		N/A
28.4	No damage to structural parts as a result of loading test		N/A
42	Insulation systems with measured temperatures exceeding Class A 105°C (based on 40°C ambient) comply with UL1446	(see appended table 42 and 56.1)	Pass
55	Polymeric enclosures and external combustible surfaces		Pass
55	Polymeric enclosures comply with: Conductive coatings applied to nonmetallic surfaces comply with UL 746C		Pass
55	External combustible surface of more than 9.47 m2 or single dimension of 3.7 m have flame spread rating not exceeding 75 (Steiner Tunnel Test)	Plastic enclosure with V-0 flammability and see appended table 56.1	N/A
55	External combustible surface of more than 4.74 m2 but not exceeding 9.47 m2 have flame spread rating not exceeding 75 (Radiant Panel or Steiner Tunnel Test)		N/A
55	Polymeric enclosures for transportable equipment rated 94V-2 or better	Plastic enclosure with V-0 flammability	Pass
55	Polymeric enclosures for fixed or stationary equipment rated 94V-0 or better	Transportable equipment.	N/A
55	Polymeric enclosures withstand 6.78 Nm impact test	(see appended table Additional Test)	Pass
55	Polymeric enclosures: no deformation after mold stress test	(see appended table Additional Test)	Pass
55	Polymeric enclosures of hand-held equipment withstands 1.22 m drop test	Not hand-held equipment.	N/A
56.3a	Connector, pin, plug attached to patient connected lead or contact cannot engage any part on the equipment, including separable cord set	Not attached to Patient-connected lead	N/A
56.3a	Connector, pin, plug attached to patient connected lead or contact cannot make contact with live parts of power receptacle outlet (if product can be used without professional supervision)		N/A
57	Permanently connected equipment provided with field wiring provision in accordance with NEC, ANSI/NFPA 70	Cord connected equipment	N/A
57.2	Power cord mains plug is "Hospital Grade" type	Power cord with hospital grade	Pass

IEC 60601			
SubClause	Difference + Test	Result - Remark	Verdict
		and see appended table 56.1 for detail	
57.2	Grounding reliability marking provided		Pass
57.2	Plug for radiography equipment acceptable for current not less than 50 % of maximum input	Not radiography equipment.	N/A
57.2	Plug acceptable for use with current not less than 125 % of rated current		Pass
57.2	Plug acceptable for voltage for which the equipment is configured when shipped		Pass
57.2	Polarized plug wired such that the center contact of edison-base lampholder, single-pole switch or single-pole overcurrent device connected in ungrounded side	Class I equipment	N/A
57.3b	Detachable power supply cord unlikely to become detached accidentally		Pass
57.3b	Flexible cord is of type acceptable for application		Pass
57.3b	Flexible cord not smaller than 18 AWG		Pass
57.3b	Flexible cord complies with serviceability requirements		N/A
57.5b	If leads are provided for connection to branch circuit, the free end is in separate compartment		N/A
57.5b	If leads are provided for connection to branch circuit, the free length of leads inside field-wiring compartment is at least 152 mm long		N/A
58.2	Connections are mechanically secured in addition to soldering		Pass
59.1	Installation of connecting cords between parts of equipment in compliance with NEC		Pass
59.1	Cable type acceptable for external interconnection		Pass
400	Oxygen		N/A
400.1	At least one of the following three requirements is satisfied:		N/A
400.1.1	Electrical components separated by barrier per 400.2	No such component	N/A
400.1.2	Compartments with electrical components ventilated per 400.3		N/A
400.1.3	Electrical components comply with 400.4 so that cannot be a source of ignition		N/A

IEC 60601			
SubClause	Difference + Test	Result - Remark	Verdict
400.2	Barrier required by 400.1 is sealed at all joints and holes	No such component	N/A
400.3	Ventilation required by 400.1 is such that oxygen content does not exceed 4% above ambient		N/A
400.4	Under N.C. and S.F.C. the product of the value of no load rms voltage and short circuit rms current less than 10 VA		N/A
400.4	Surface temperature of components below 300°C in N.C. and S.F.C	Max surface temperature 55 degree C < 300 degree C	Pass
400.5	External exhaust gas outlets located at least 20 cm from any electrical component mounted on the outside		N/A
400.6	Hospital beds intended for use with oxygen administering equipment provided with required markings		N/A
400.7	Pendant controls on hospital beds with oxygen administering equipment marked as required		N/A
400.8	Instructions for installation are in compliance with requirements of this clause		N/A
600.1	Separate power units packed with equipment	Panel PC with internal power supply	N/A
600.1	Separate power units provided with correlation marking		N/A
600.2.1	Direct plug-in unit construction and performance comply with required sections of UL1310	Not DPIU	N/A
600.2.2	Direct plug-in unit external temperature rise during overheating test do not exceed 65°C		N/A
600.2.3	If direct plug-in unit provided with a mounting tab - unit marked as required by UL1310		N/A

Enclosure
Photographs

Supplement Id	Description
3-01	Product front view
3-02	Product internal view (remove plastic enclosure)
3-03	Product internal view (remove plastic enclosure)
3-04	Product internal view (internal chassis and mainboard)
3-05	Product internal view (remove internal chassis)
3-06	Product internal view
3-07	Inverter PWB
3-08	Product with stand
3-09	Product rear view

Photographs ID 3-01

Photographs ID 3-02

Photographs ID 3-03

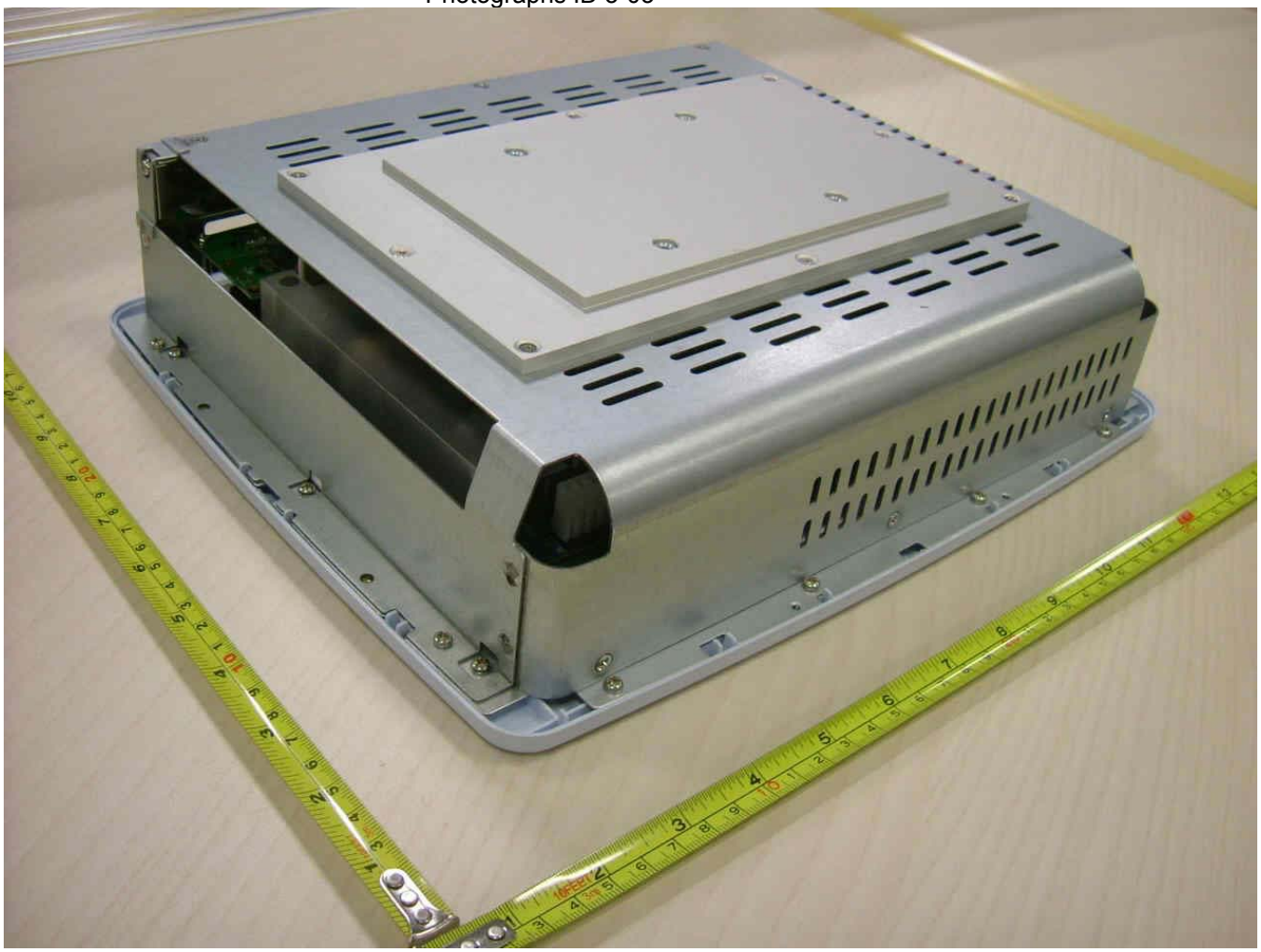

Photographs ID 3-04

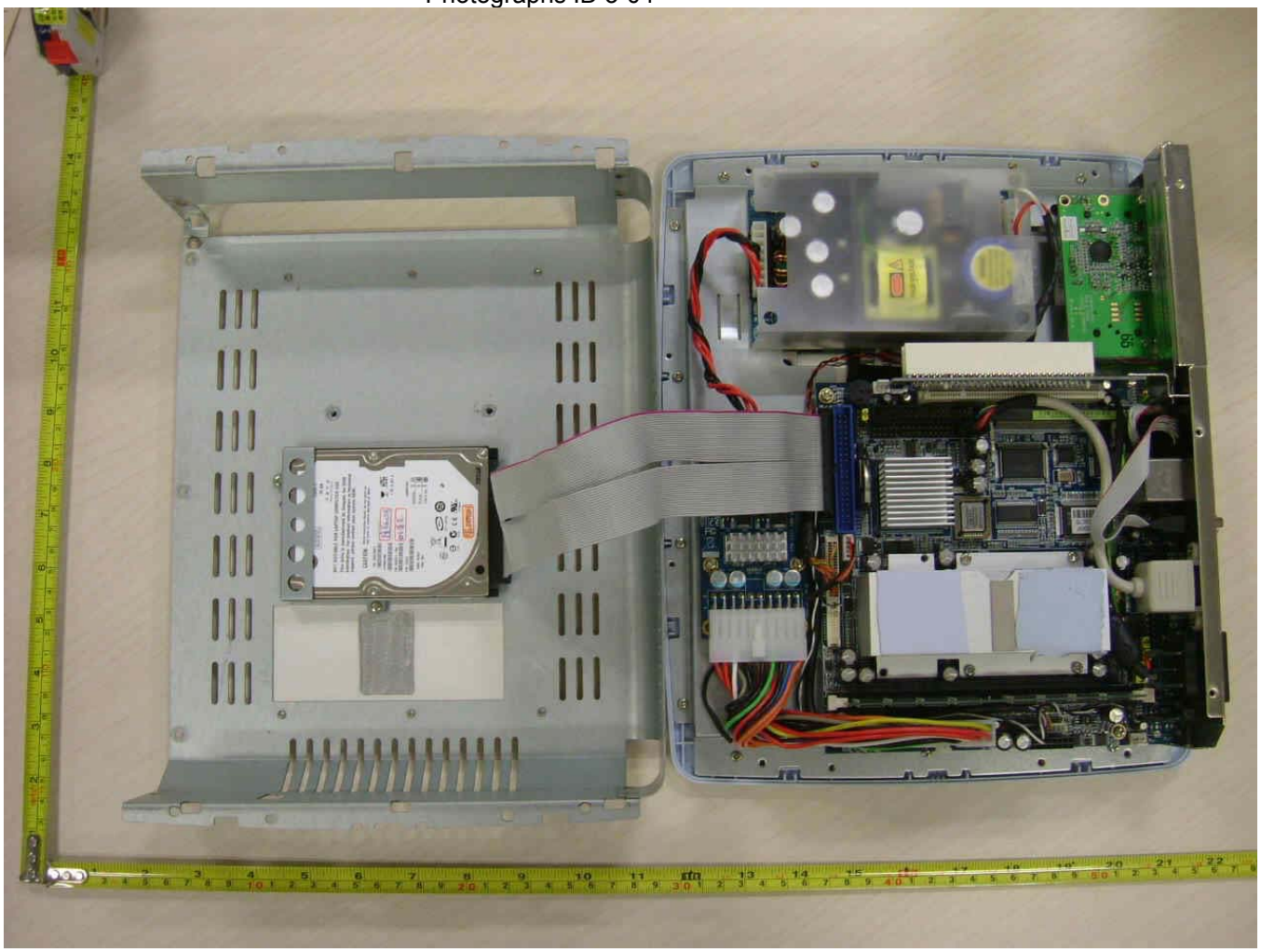

Photographs ID 3-05

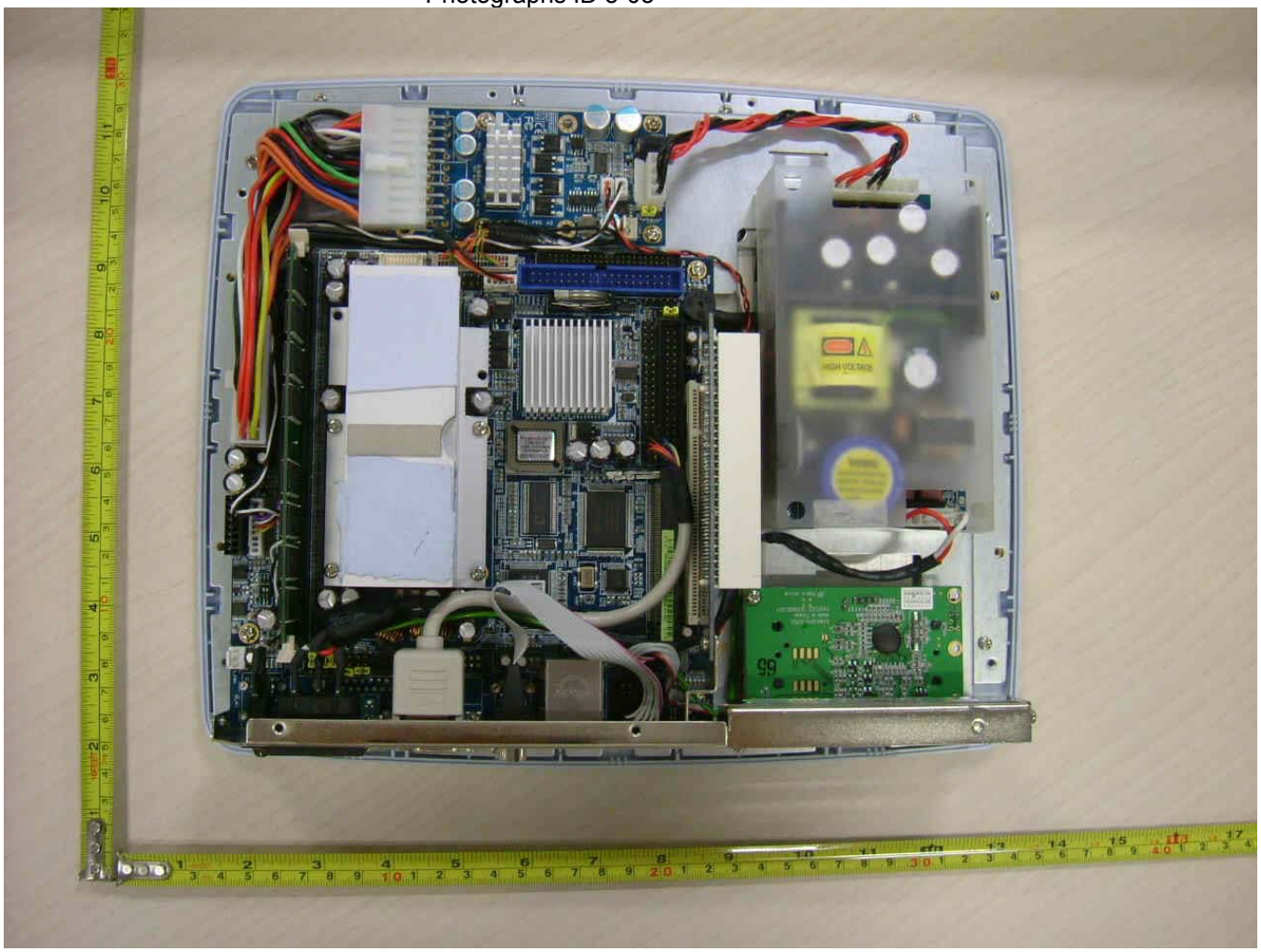

Photographs ID 3-06

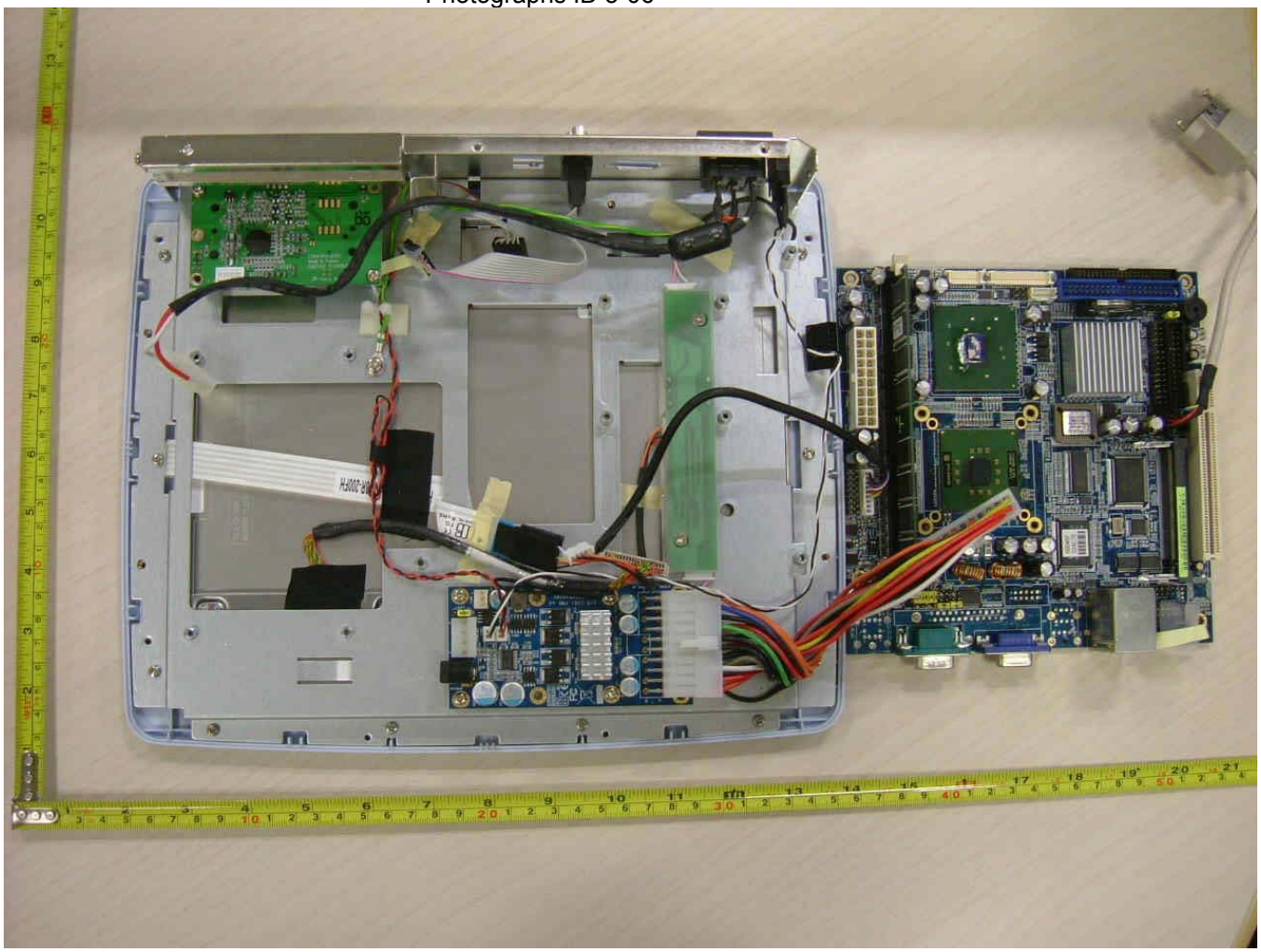

Photographs ID 3-07

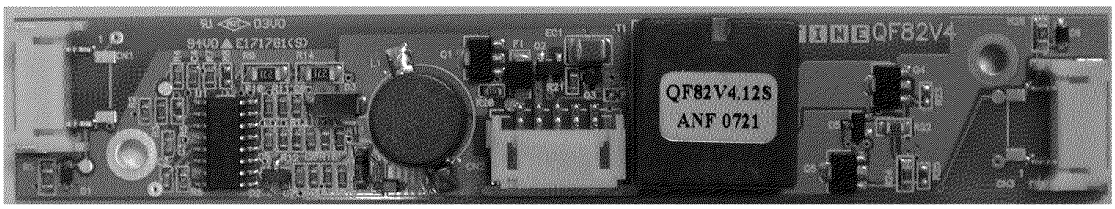

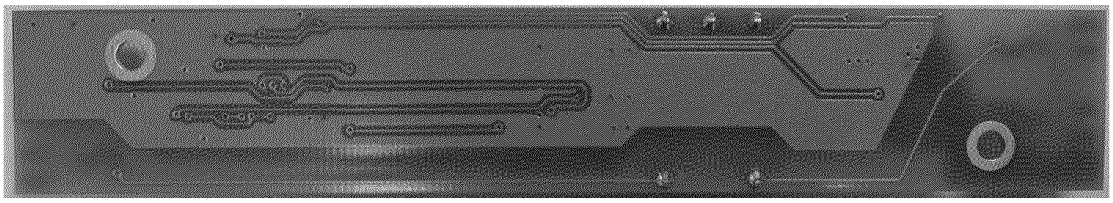

Photographs ID 3-08

Photographs ID 3-09

Enclosure
Diagrams

Supplement Id	Description
4-01	Plastic enclosure dimension with opening dimension
4-02	Internal chassis dimension
4-03	Outer heatsink dimension
4-04	Stand dimension
4-06	Inverter transformer Spec
4-07	Mylar dimension (cover on inverter)
4-08	Mylar dimension (cover on power supply)
4-09	Heatsink dimension (located in CPU (U13 and U20))
4-10	Panel dimension

Diagrams ID 4-01

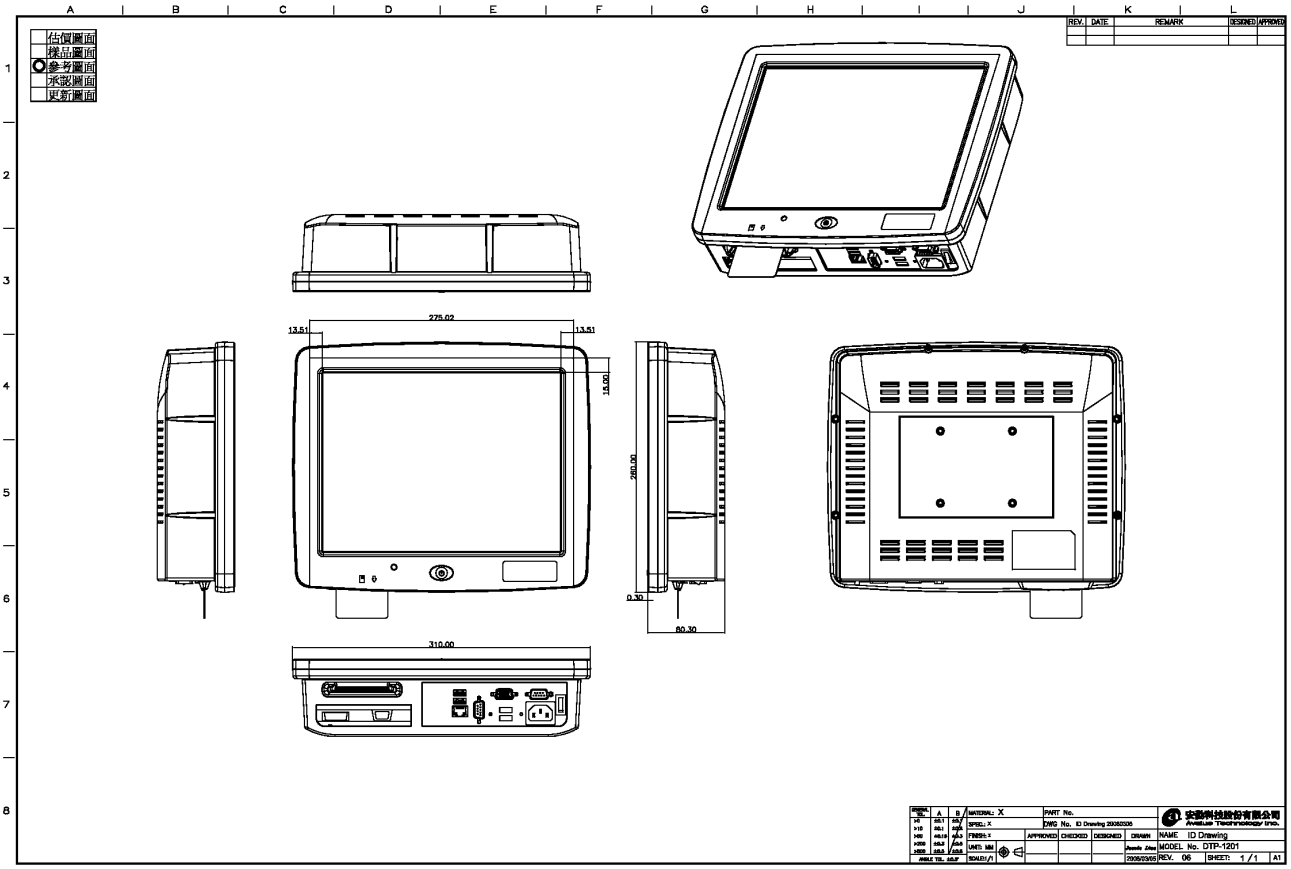

Diagrams ID 4-02

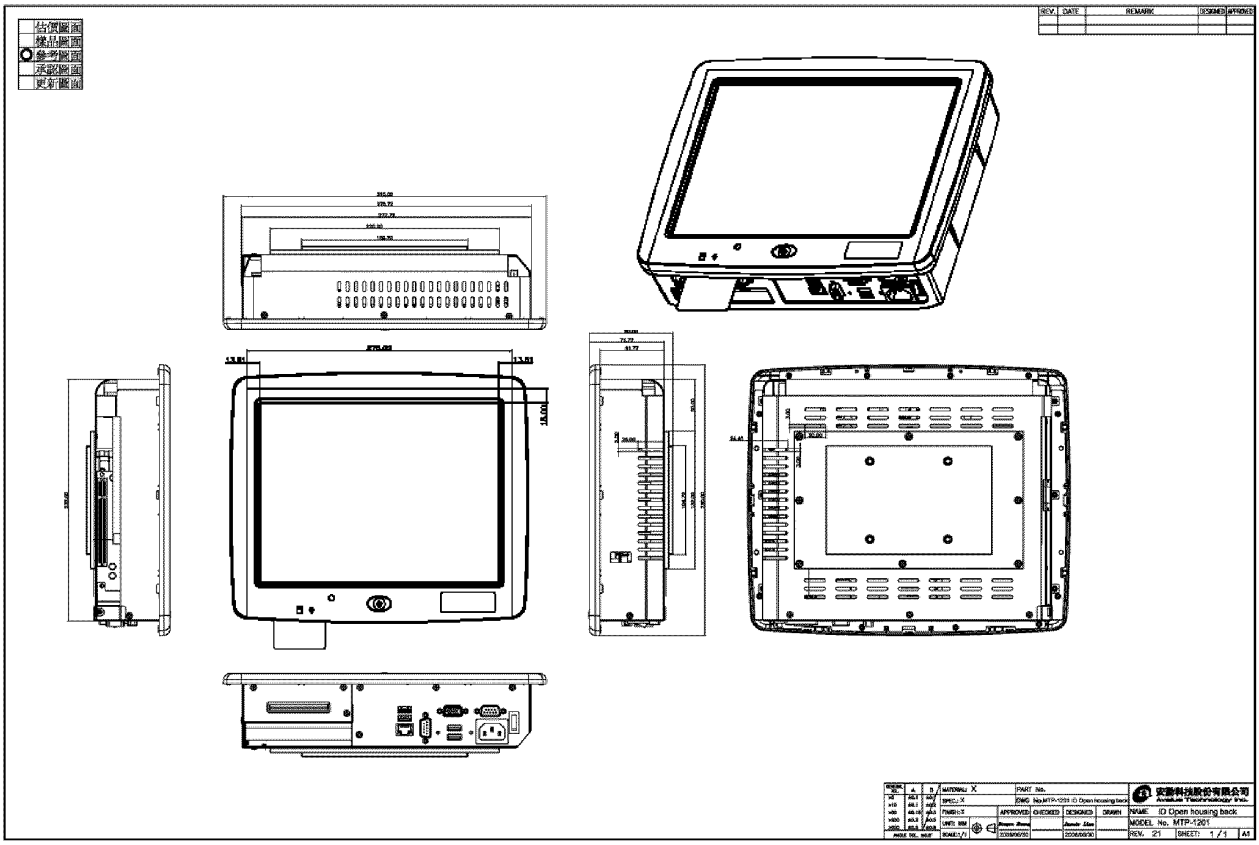

Diagrams ID 4-03

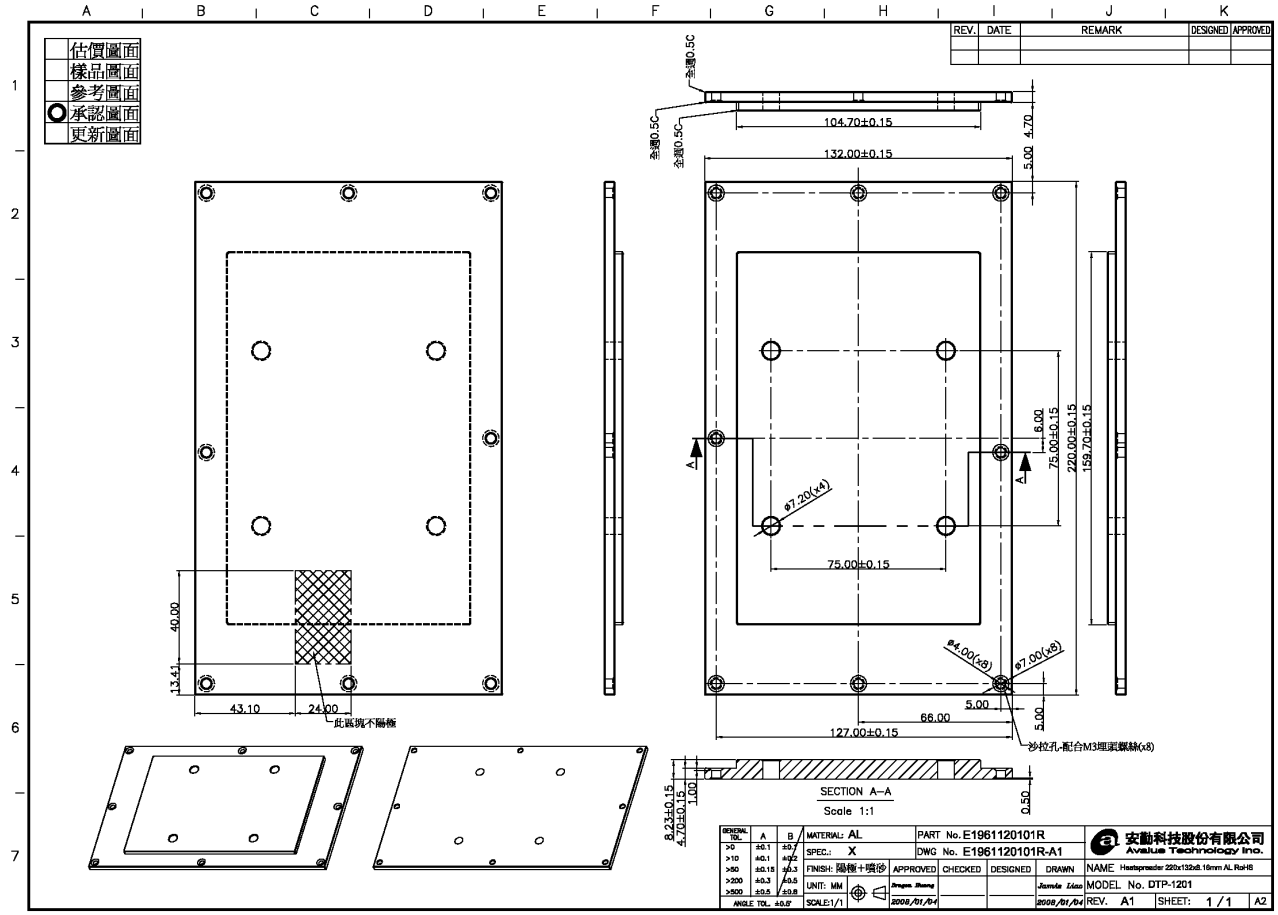

Diagrams ID 4-04

DP–1201 DESKTOP STAND

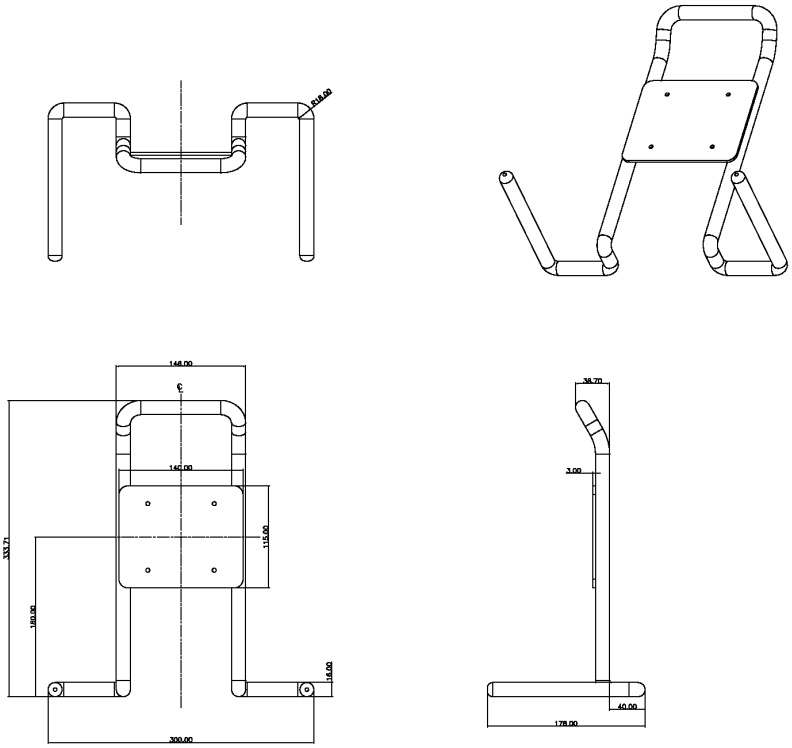

Diagrams ID 4-04

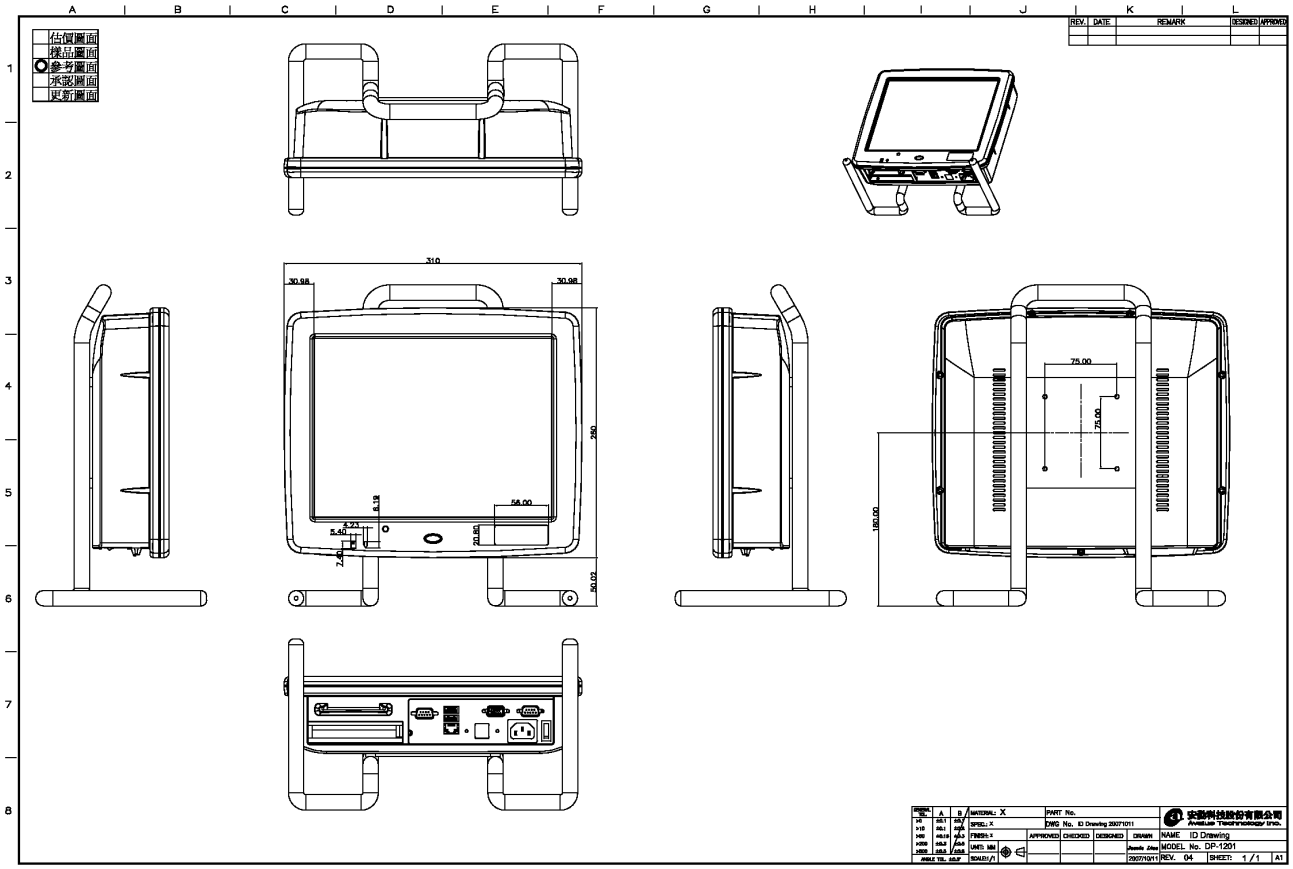

Diagrams ID 4-06

HWA YOUN CO., LTD. QF82V4 06/08/11 Page 10

EFD15-TF715

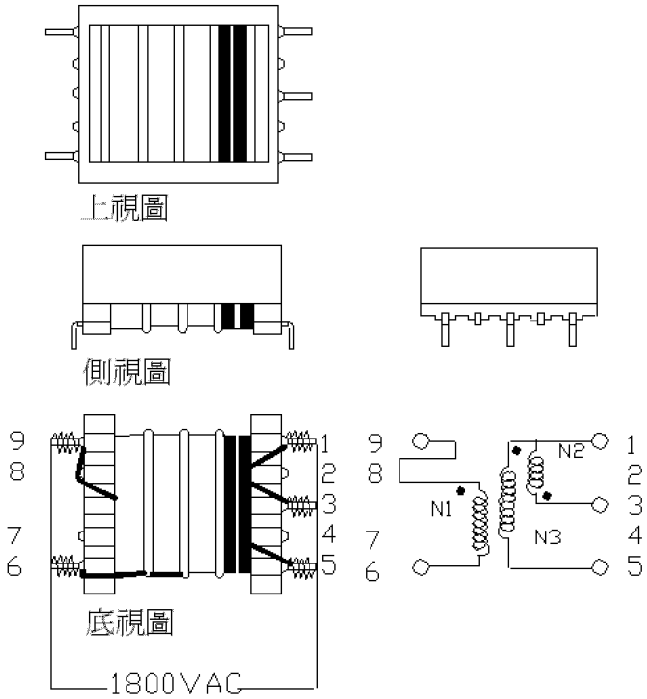

Core									
Bobbin									
Tape									
Wire N1:1SFBW , SFBY , Pp155 ; N2,3: 2UEW									
Impregnation				RPM					
Gap									
Color Pink 粉紅色									
耐壓 Primary to Secondary 1800Vac 5mA 60sec									
備註:									
Insulation Tape Layers	Winding	Terminal Start ~ End	Wire Gauge(mm)	Turns	Color	H		DCR(Ω)	
						MAX	MIN	MAX	MIN
	N1	9 ~ 6	0.045 1SFBW	1600					
	N2	3 ~ 1	0.23 2UEW	16					
	N3	1 ~ 5	0.23 2UEW	16					
備註:									

Diagrams ID 4-06

HWA YOUN CO., LTD. QF82V4 06/08/11 Page 11

QF Number:	Whether Uses	QF82V4			
ITEM		MATERIAL	CLASS	UL FILE NO	MANUF ACTURER
1.FERRITE CORE	V	2F8;2G8			TOMITA
	V	NC-2H			NICERA
2.BOBBIN	V	LCP (94V-0) E4008L	130°C	E54705(M)	SUMITOMO CHEMICAL CO LTD
3.TAPE		3M NO.1350F-1(b)	130°C	E17385(N)	MINNESOTA MINING & MFG CO ELECTRICAL SPECIALTIES DIV
4.MYLAR FILM		LUMIRROR Z2 (94VTM-2)	105°C	E86511(M)	TORAY INDUSTRIES INC FILM DIV
	V	Polyimide (PI) 6051	130°C	E229087	WUXI GOTO POLYMER MATERIALS CO LTD
		FORMEX-18	105°C	E121855	ITWFORMEX CO.LTD
		ER	105°C	E110983	GARWARE POLYESTER.LTD
5.WIRE	V	POLYURETHANE ENAMELLED COPPER UEW-2	130°C	E79029(S)	TOTOKU ELECTRIC CO.LTD
	V	UEW-1(SFBW,SFBY)	155°C	E79029(S)	TOTOKU ELECTRIC CO.LTD
	V	Pp155	155°C	E143312	ELEKTRISOLA CO.LTD
	V	DD	130°C	E84081	PACIFIC ELECTRIC WIRE & CABLE CO.LTD
6.VARNISH	V	BC-359	130°C	E51047(M)	JOHN C DOLPH CO
	V	BC-346A	200°C	E51047(M)	JOHN C DOLPH CO
7.COVER		LCP(94V-0) E4008L	130°C	E54705(M)	SUMITOMO CHEMICAL CO LTD
8.EPOXY		R-10(94V-0)	160°C	E70012(M)	ZU YU CHEMICAL CORP.
	V	F500A ; F500B	94V-0	E180899	HUNG SHIUNG ENTERPRISES CO.LTD
9. SILCONE RUBBER	V	SE9189 GRAY RTV	150°C	E55519	DOW CORNING CO.LTD
		1080 RTV	130°C	E40195	
RUBBER	V	777HFR	94V-0	E129576	O-KONG INDUSTRIES CO LTD

Diagrams ID 4-06

HWA YOUN CO., LTD. QF82V4 06/08/11 Page 12

QF Number:	Whether Uses	QF82V4			
ITEM		MATERIAL	CLASS	UL FILE NO	MANUF ACTURER
10.PCB	V	03V0	130°C	E171781	ART P.C.B CORP
11.FUSE		251;429		E10480	LITTELFUSE INC
		451/453		E10480	LITTELFUSE INC
		C1Q		E20624	BEL FUSE INC
		3216FF		E19180	COOPER INDUSTRIES INC BUSSMANN DIV
	V	ICP-S		E107865	ROHM CO ., LTD.
12.PHOTOCOUPLER	V	LTV817A(QF63 only)		E113898	LITE-ON TECHNOLOGY
13.CONNECTOR	V	SM02B 、SM02(8.0)、SM04(4.0)、SXB-PH、BXB-PH Series	94V-0	E60389	TOKUTSHU TERMINAL CO.,LTD(JST)
		SM02B 、SM02(8.0)、SM04(4.0)、SXB-PH、BXB-PH、53261 Series	94V-0	E179987	GEAN-LEA ENTERPRISES CO.,LTD

Diagrams ID 4-07

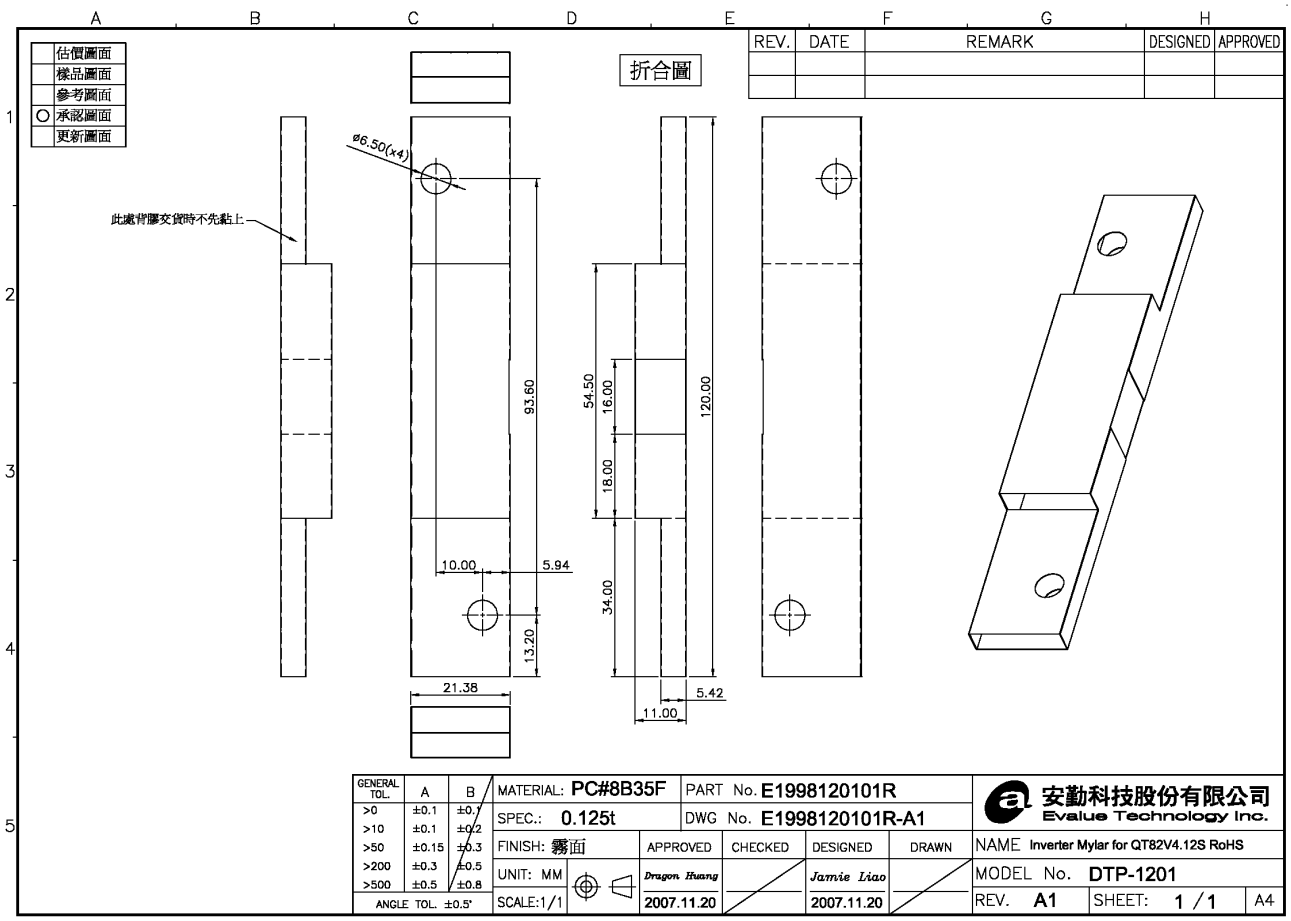

Diagrams ID 4-08

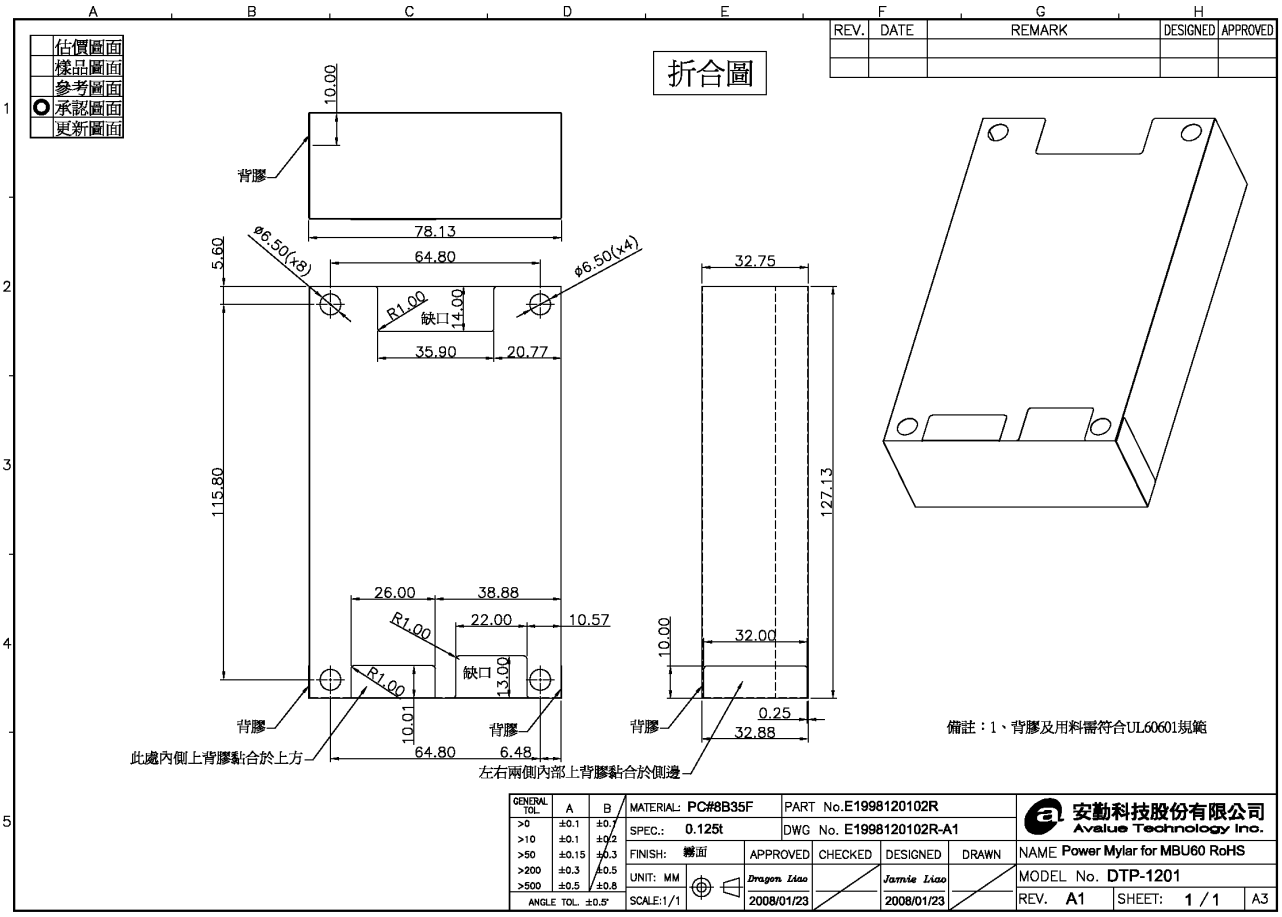

Diagrams ID 4-09

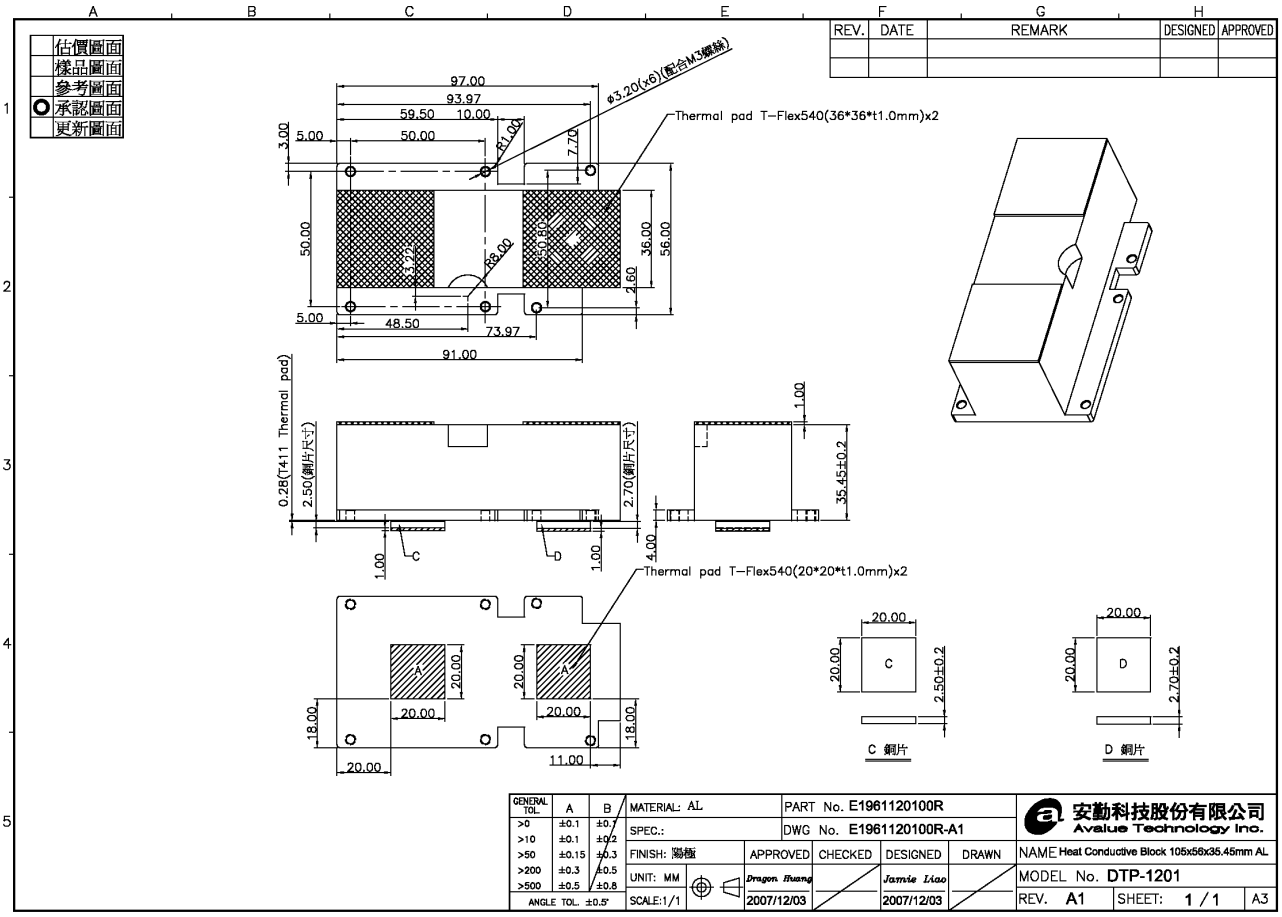

Diagrams ID 4-10

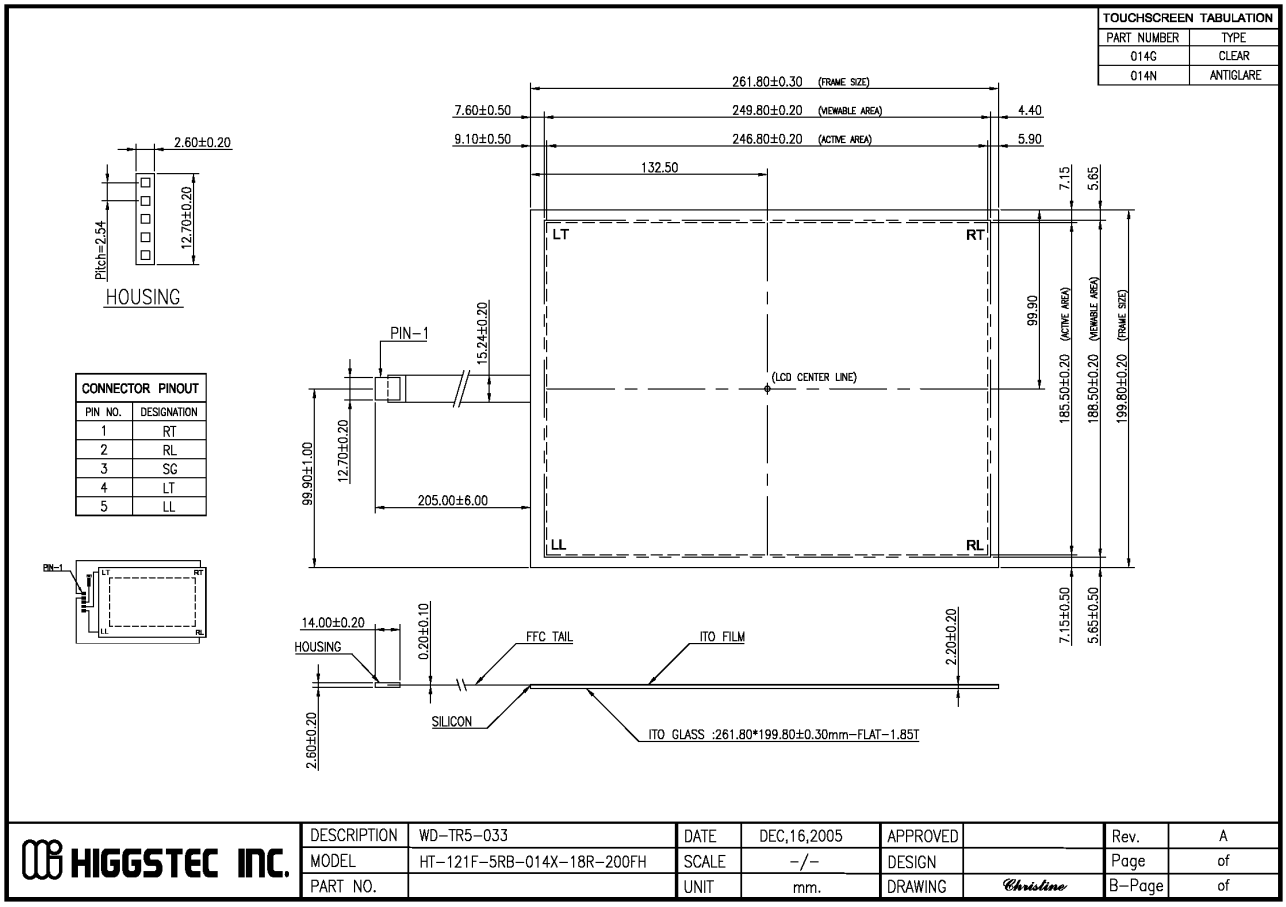

Enclosure
Schematics + PWB

Supplement Id	Description
5-01	Inverter Spec

Schematics ID 5-01

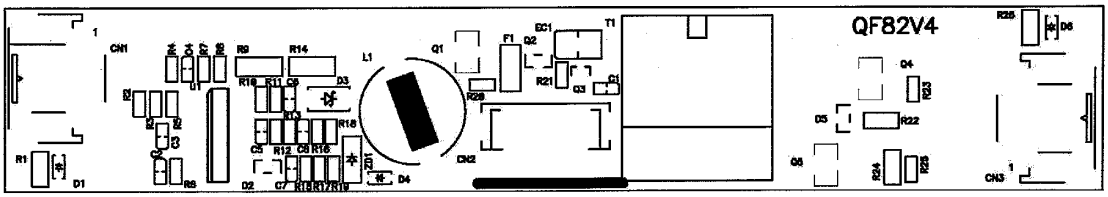

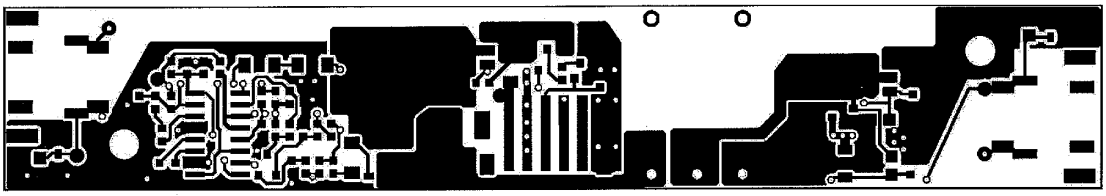

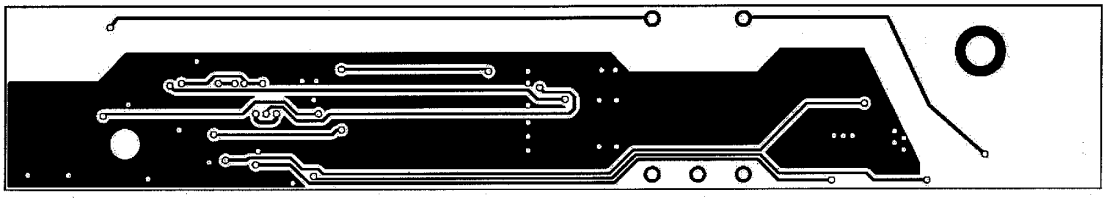

Enclosure

Manuals

Supplement Id	Description
6-01	User Manual

Manuals ID 6-01

MTP-1201

12" Medical Touch Panel PC

Quick Reference Guide

1st Ed –July 2008

Copyright Notice

Copyright © 2007-2008 Avalue Technology Inc., ALL RIGHTS RESERVED.

Part No. E2017M12100R

Manuals ID 6-01

MTP-1201

FCC Statement

THIS DEVICE COMPLIES WITH PART 15 FCC RULES. OPERATION IS SUBJECT TO THE FOLLOWING TWO CONDITIONS:
(1) THIS DEVICE MAY NOT CAUSE HARMFUL INTERFERENCE.
(2) THIS DEVICE MUST ACCEPT ANY INTERFERENCE RECEIVED INCLUDING INTERFERENCE THAT MAY CAUSE UNDESIRED OPERATION.
THIS EQUIPMENT HAS BEEN TESTED AND FOUND TO COMPLY WITH THE LIMITS FOR A CLASS "A" DIGITAL DEVICE, PURSUANT TO PART 15 OF THE FCC RULES.
THESE LIMITS ARE DESIGNED TO PROVIDE REASONABLE PROTECTION AGAINST HARMFUL INTERFERENCE WHEN THE EQUIPMENT IS OPERATED IN A COMMERCIAL ENVIRONMENT. THIS EQUIPMENT GENERATES, USES, AND CAN RADIATE RADIO FREQUENCY ENERGY AND, IF NOT INSTATLLED AND USED IN ACCORDANCE WITH THE INSTRUCTION MANUAL, MAY CAUSE HARMFUL INTERFERENCE TO RADIO COMMUNICATIONS.
OPERATION OF THIS EQUIPMENT IN A RESIDENTIAL AREA IS LIKELY TO CAUSE HARMFUL INTERFERENCE IN WHICH CASE THE USER WILL BE REQUIRED TO CORRECT THE INTERFERENCE AT HIS OWN EXPENSE.

Disclaimer

Avalue Technology Inc. reserves the right to make changes, without notice, to any product, including circuits and/or software described or contained in this manual in order to improve design and/or performance. Avalue Technology assumes no responsibility or liability for the use of the described product(s), conveys no license or title under any patent, copyright, or masks work rights to these products, and makes no representations or warranties that these products are free from patent, copyright, or mask work right infringement, unless otherwise specified. Applications that are described in this manual are for illustration purposes only. Avalue Technology Inc. makes no representation or warranty that such application will be suitable for the specified use without further testing or modification.

Life Support Policy

Avalue Technology's PRODUCTS ARE NOT FOR USE AS CRITICAL COMPONENTS IN LIFE SUPPORT DEVICES OR SYSTEMS WITHOUT THE PRIOR WRITTEN APPROVAL OF Avalue Technology Inc.
As used herein:

1. Life support devices or systems are devices or systems which, (a) are intended for surgical implant into body, or (b) support or sustain life and whose failure to perform, when properly used in accordance with instructions for use provided in the labeling, can be reasonably expected to result in significant injury to the user.
2. A critical component is any component of a life support device or system whose failure to perform can be reasonably expected to cause the failure of the life support device or system, or to affect its safety or effectiveness.

Manuals ID 6-01

Quick Reference Guide

A Message to the Customer

Avalue Customer Services

Each and every Avalue's product is built to the most exacting specifications to ensure reliable performance in the harsh and demanding conditions typical of industrial environments. Whether your new Avalue device is destined for the laboratory or the factory floor, you can be assured that your product will provide the reliability and ease of operation for which the name Avalue has come to be known.

Your satisfaction is our primary concern. Here is a guide to Avalue's customer services. To ensure you get the full benefit of our services, please follow the instructions below carefully.

Technical Support

We want you to get the maximum performance from your products. So if you run into technical difficulties, we are here to help. For the most frequently asked questions, you can easily find answers in your product documentation. These answers are normally a lot more detailed than the ones we can give over the phone. So please consult the user's manual first.

To receive the latest version of the user's manual; please visit our Web site at:
http://www.avalue.com.tw

Headquarters
Avalue Technology Inc.
7F, 228, Lian-cheng Road,
Chung Ho City, Taipei,
Taiwan
Tel : +886-2-8226-2345
Fax : +886-2-8226-2777
http://www.avalue.com.tw
E-mail: service@avalue.com.tw

Europe Branch Office
Avalue Europe A/S
Moelledalen 22C, 3140 Aalsgaarde,,
Denmark
Tel : +45-7025-0310
Fax : +45-4975-5026
http://www.avalue.com.tw
E-mail: service.europe@avalue.com.tw

China Branch Office
Avalue Technology Shanghai Inc.
Suite A, South 5F, No. 829,
Yisan Road, Caohejing Hi-tech Park,
Shanghai 200233, China
Tel : +86-21-5426-3399
Fax : +86-21-6495-0370
http://www.avalue.com.tw
E-mail: service @avalue.com.tw

US Branch Office
Avalue Technology Inc.
200 Tornillo Way, Suite 210,
Tinton Falls, NJ 07712, USA
Tel: +1-732-578-0200
Fax: +1-732-578-0250
http://www.avalue-usa.com
E-mail: support @avalue-usa.com

Manuals ID 6-01

MTP-1201

Product Warranty

Avalue warrants to you, the original purchaser, that each of its products will be free from defects in materials and workmanship for two years from the date of purchase.

This warranty does not apply to any products which have been repaired or altered by persons other than repair personnel authorized by Avalue, or which have been subject to misuse, abuse, accident or improper installation. Avalue assumes no liability under the terms of this warranty as a consequence of such events. Because of Avalue's high quality-control standards and rigorous testing, most of our customers never need to use our repair service. If any of Avalue's products is defective, it will be repaired or replaced at no charge during the warranty period. For out-of-warranty repairs, you will be billed according to the cost of replacement materials, service time, and freight. Please consult your dealer for more details. If you think you have a defective product, follow these steps:

1. Collect all the information about the problem encountered. (For example, CPU type and speed, Avalue's products model name, hardware & BIOS revision number, other hardware and software used, etc.) Note anything abnormal and list any on-screen messages you get when the problem occurs.
2. Call your dealer and describe the problem. Please have your manual, product, and any helpful information available.
3. If your product is diagnosed as defective, obtain an RMA (return material authorization) number from your dealer. This allows us to process your good return more quickly.
4. Carefully pack the defective product, a complete Repair and Replacement Order Card and a photocopy proof of purchase date (such as your sales receipt) in a shippable container. A product returned without proof of the purchase date is not eligible for warranty service.
5. Write the RMA number visibly on the outside of the package and ship it prepaid to your dealer.

Manuals ID 6-01

Quick Reference Guide

Contents

1. Getting started 6
1.1 Safety Precautions 6
1.2 Safety & Warranty 6
1.3 Packing List 6
1.4 System Overview 8
1.4.1 Front View 8
1.4.2 Rear View 8
1.4.3 Bottom View 9
1.4.4 Installation 9
1.4.5 Maintains 10
1.5 System Specifications 12
2. Hardware Configuration 14
2.1 System Dimensions 15
2.1.1 Front Side 15
2.1.2 Rear Side 16
2.1.3 Mounting Plate 17

Manuals ID 6-01

MTP-1201

1. Getting started

1.1 Safety Precautions

Warning!

Always completely disconnect the power cord from your chassis whenever you work with the hardware. Do not make connections while the power is on. Sensitive electronic components can be damaged by sudden power surges. Only experienced electronics personnel should open the PC chassis.

Caution!

Always ground yourself to remove any static charge before touching the CPU card. Modern electronic devices are very sensitive to static electric charges. As a safety precaution, use a grounding wrist strap at all times. Place all electronic components in a static-dissipative surface or static-shielded bag when they are not in the chassis.

Medical equipment with respect to electric shock,fire and mechanical hazards only in accordance with UL 60601-1, and CANICSA C22.2 No.601.1

Attention, consult ACCOMPANYING DOCUMENTS.

Ground wire Protective Ground wire

Medical equipment with respect to electric shock,fire and mechanical hazards only in accordance with UL 60601-1,and CANICSA C22.2 NO.601.1

Warning!

Always completely disconnect the power cord from your board whenever you are working on it. Do not make connections whilie the power is on, because a sudden rush of power can damage sensitive electronic components.

Caution!

Always ground yourself to remove any static charge before touching the board. Modern electonic devices are very sensitive to static electric charges.Use a rounding wrist strap at all times.Place all electronic components on a static-dissipetive surface or in a static-shielded bag when they are not in the chassis.

Manuals ID 6-01

1.2 Safety & Warranty

1. Read these safety instructions carefully.
2. Keep this user's manual for later reference.
3. Disconnect this equipment from any AC outlet before cleaning. Do not use liquid or spray detergents for cleaning. Use a damp cloth.
4. For pluggable equipment, the power outlet must be installed near the equipment and must be easily accessible.
5. Keep this equipment away from humidity.
6. Put this equipment on a reliable surface during installation. Dropping it or letting it fall could cause damage.
7. The openings on the enclosure are for air convection. Protect the equipment from overheating. DO NO COVER THE OPENINGS.
8. Make sure the voltage of the power source is correct before connecting the equipment to the power outlet.
9. Position the power cord so that people cannot step on it. Do not place anything over the power cord.
10. All cautions and warnings on the equipment should be noted.
11. If the equipment is not used for a long time, disconnect it from the power source to avoid damage by transient over-voltage.
12. Never pour any liquid into an opening. This could cause fire or electrical shock.
13. Never open the equipment. For safety reasons, only qualified service personnel should open the equipment.

1.3 Packing List

- 1 x Multi-functional Touch Panel Computer
- 1 x Quick Reference Guide
- 1 x CD/DVD-ROM contains the followings:
  - User's Manual (this manual in PDF file)
  - Ethernet driver and utilities
  - VGA drivers and utilities
  - Audio drivers and utilities

If any of the above items is damaged or missing, contact your retailer.

Manuals ID 6-01

MTP-1201

1.4 System Overview

1.4.1 Front View

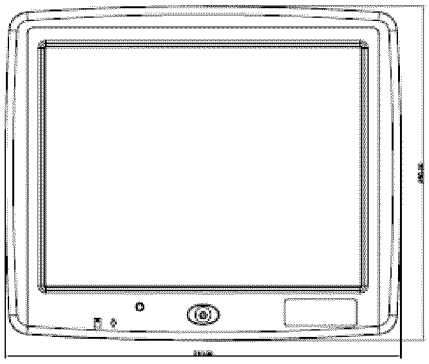

1.4.2 Rear View

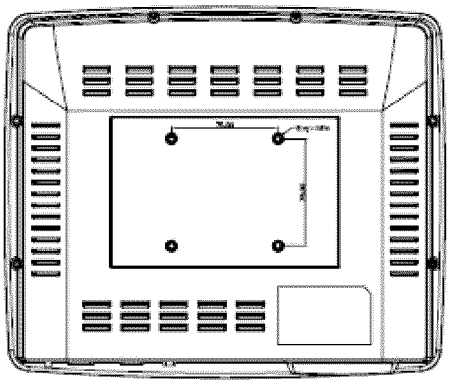

Manuals ID 6-01

1.4.3 Bottom View

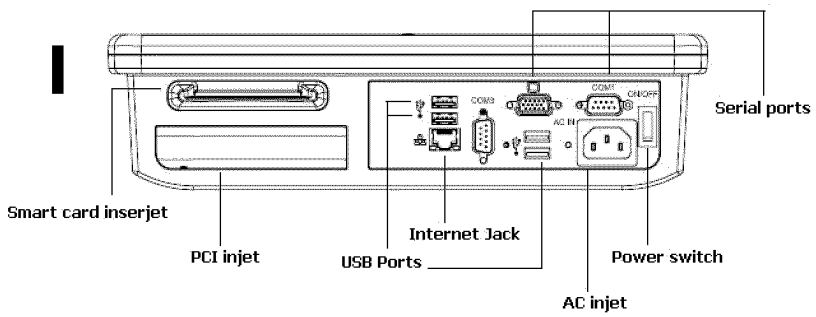

1.4.4 Installation

Install the stand

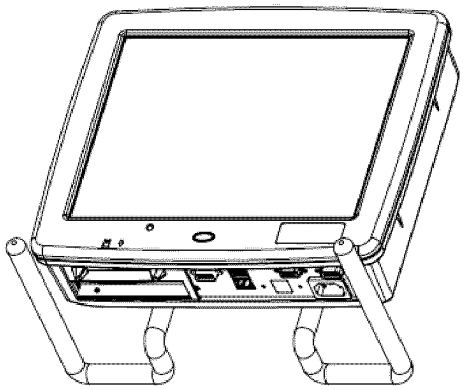

Install the device and stand

Manuals ID 6-01

MTP-1201

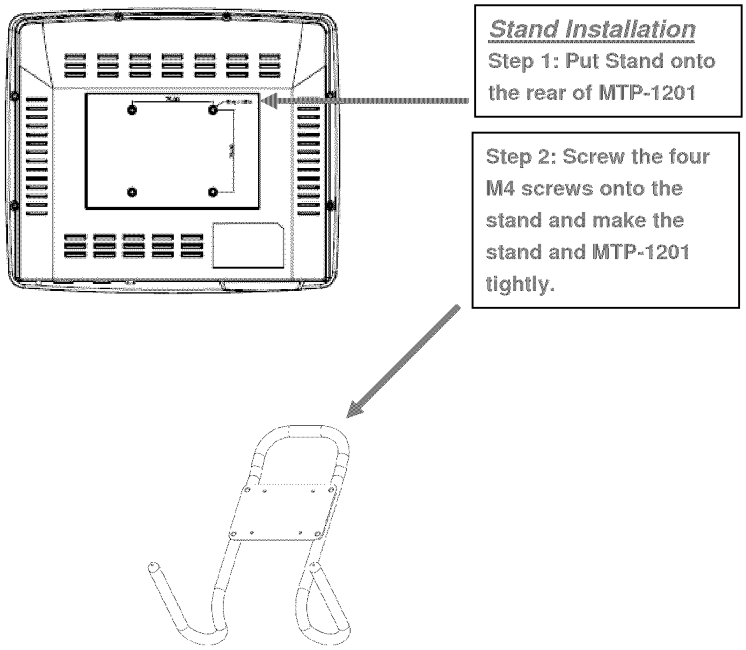

Connect to utility

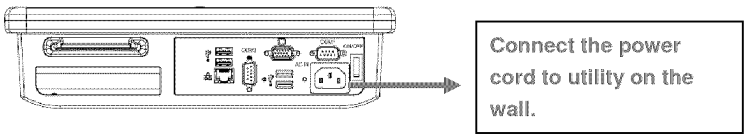

1.4.5 Maintains

Intend Use

MTP-1201 designs for nursing satiation by doctors and nurses use only. Patient should not operate or reach the device. Please locate the device beyond patients' reachable area or set up mark warn patient to operate or reach the device.

Storage

Please operate and storage the device within operating humidity 35% to 75%, operating pressure within 700HPA~1060HPA, and 0 to 40℃ for the operating

temperature.

Cleaning
Please use alcohol or water to sterilize the device; we suggest you clean once a year or you can clean it by your demand.

Disposal
When you want to dispose the device please contact with the authorities for the disposal.

Disconnect Power
When you not use MTP-1201 for over three months or you want to disconnect the power. Please unplug the power cord with utility on MTP-1201.

Out of working
Please do not replace and components and parts by your own. If you find any problem on operation please contact with your supplier or Avalue directly.

Operation
The device can be operated continuously with stable power.

Manuals ID 6-01

MTP-1201

1.5 System Specifications

Computing Platform	
CPU	Onboard IntelR µFC-BGA 479 CeleronR M600MHZ with 512K L2 Cache
Northbridge	Intel JG82855GME/SL7VN FCBGA-732 SMD
Southbridge	Intel NH82801DB/SL8DE ICH4 BGA-421 SMD
I/O Chip	Winbond W83627HG-AW
System Memory	One 512MB 184-pin DDR 333 SDRAM supports up to 1GB DDR 266/333 SDRAM with ECC Supported
Video	Intel® 82855GME GMCH integrated Extreme Graphics 2 controller
Video Memory	Intel® DVMT 2.1 supports up to 64 MB video memory
Audio	VIA VT1616 supports 5.1 CH Audio
Serial Ports	2 x EIDE (Ultra DMA 100), 3 x RS-232, 1x RS-232/422/485, 1x K/B, 1 x Mouse
USB	4 x USB 2.0 by USB type A connectors(Optional)
Keyboard Connector	1 x ps2 ports
Mouse Connector	1 x ps2 ports
GPIO	8 x I/O lines, keypad, buzzer, on-hook
Thermal Protection	Internal sensor generates interrupt
Watchdog Timer	Reset:1 sec.~255 min. and 1 sec. or 1min./step
LAN	Realtek RTL8110S Gigabit LAN
Expansion	One external PCI Slot and one internal mini-PCI slot
Water-dust IP Resistant	IP65 Compliant Front Panel ;IPX0 for complete system
Certification	FCC Class B, EN60601, UL60601-1
Operating Temp.	0-40℃
Storage Temp.	-20℃ ~+65℃RH
Operating Humidity	20%~85%
Operating pressure	700HPA~1060HPA
Intend Use	Point of Care, operating PC for nurse, doctor , and professional medical person

Manuals ID 6-01

Quick Reference Guide

Display Screen	
Type	12.1" CMO G121S1-L01 SVGA TFT LCD & Touchscreen
Color Depth	18 bit
Brightness	450 nits
Touch Screen	5-wire touch screen
Touch Controller	RS232 Interface Touch Controller
Peripherals and Device Interface	
Smart Card Reader	Integrated module
User Controls	Membrane keypad integrated on front panel
USB Ports	4 x USB 2.0 by USB type A connectors
Reset Switch	Push button in the rear panel
Power Switch	Stand-by switch on the front panel by membrane
Display Inverter	Power enable and separate brightness control
Audio Sub System	
Buzzer	Turn-on warming
Peripherals Devices	
Hard Drive	40Gb 2.5-inch HDD
Power Supply Unit	Power input: AC 100-240V,47-63Hz,1.6-0.8A
Mechanical Specifications	
Mounting	VESA 75mm x 75mm mounting hole pattern
IP Rating	Front Panel IP65 compliant
Dimensions	370mm x 230mm x 75 mm
Weight	5.5Kg
Cooling	Fanless design, rear heatsink with wipe clean design

* All specifications are subject to change without notifications.

Manuals ID 6-01

2 Hardware Configuration

Manuals ID 6-01

2.1 System Dimensions

2.1.1 Front Side

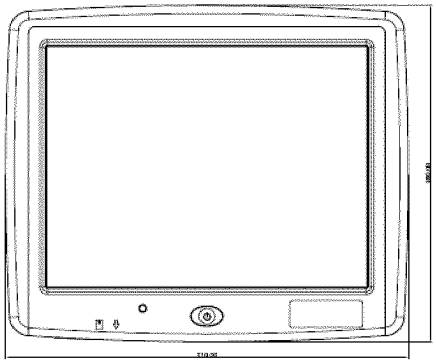

Manuals ID 6-01

MTP-1201

2.1.2 Rear Side

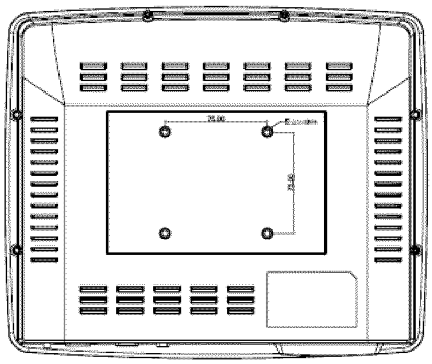

16 MTP-1201 Quick Reference Guide

Manuals ID 6-01

Quick Reference Guide

2.4.1 Mounting Plate

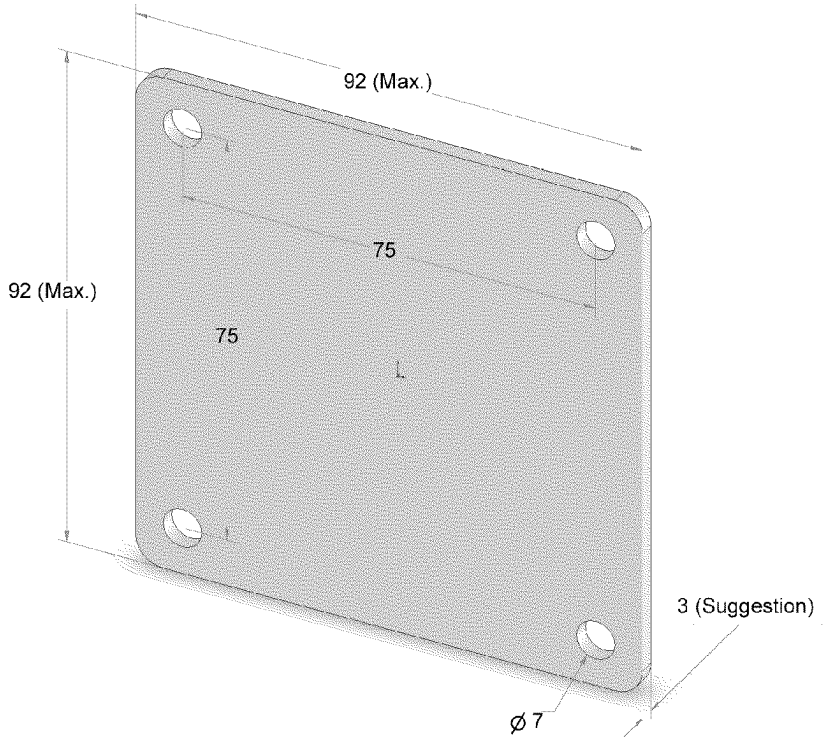

* Screw size: M6 x 8 (4 pcs)

(Unit: mm)

Note: If you need more detail information, please refer to TPM-001 Quick Installation Guide and User's Manual or visit our website: www.Avalue-tech.com

Enclosure

Miscellaneous

Supplement Id	Description
7-01	Label
7-02	Carton Label

Misc ID 7-01

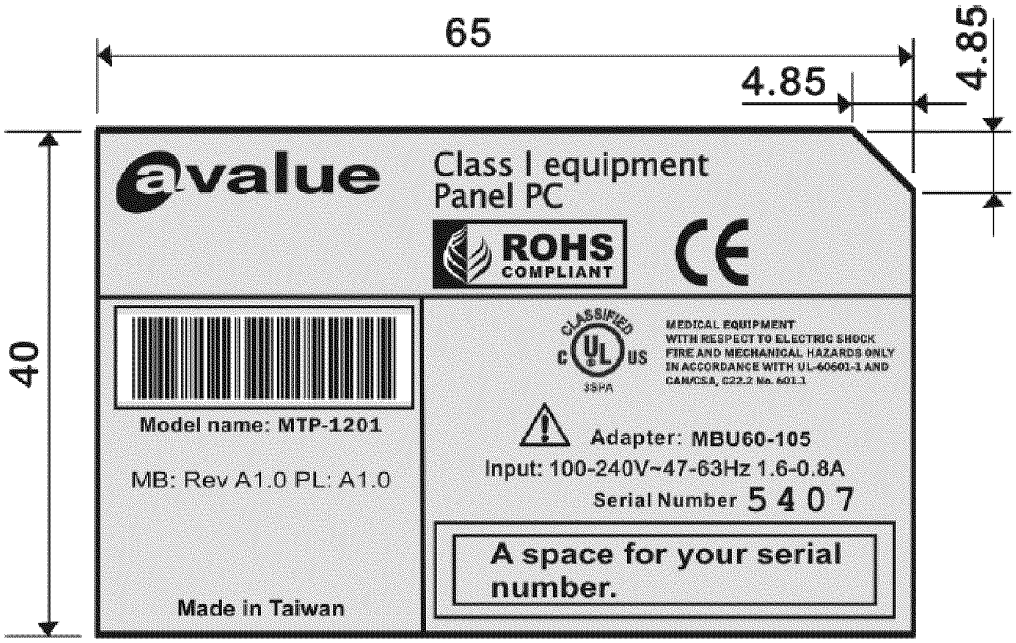
65
4.85
4.85
40
avalue
Class I equipment
Panel PC
ROHS
COMPLIANT
CE
Model name: MTP-1201
MB: Rev A1.0 PL: A1.0
Made in Taiwan
CLASSIFIED
C UL US
3SPA
MEDICAL EQUIPMENT
WITH RESPECT TO ELECTRIC SHOCK
FIRE AND MECHANICAL HAZARDS ONLY
IN ACCORDANCE WITH UL-60601-1 AND
CAN/CSA, C22.2 No. 601.1
Adapter: MBU60-105
Input: 100-240V~47-63Hz 1.6-0.8A
Serial Number 5407
A space for your serial number.

Misc ID 7-02

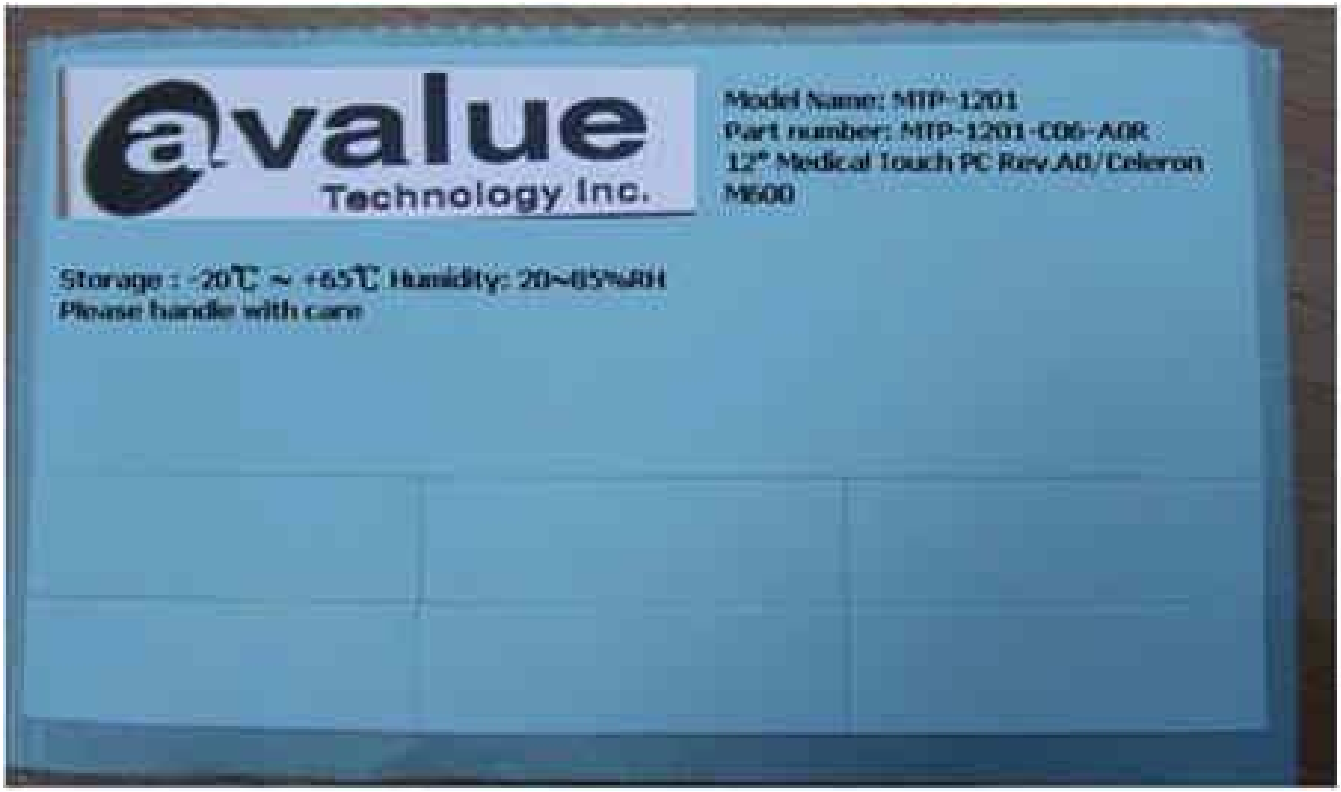
value
Technology Inc.
Model Name: MTP-1201
Part number: MTP-1201-C06-A0R
12" Medical Touch PC Rev.A0/Celeron
M600
Storage : -20℃ ~ +65℃ Humidity: 20~85%RH
Please handle with care

Enclosure
Test Record

Description
Test Record 1
CRD
Datasheet 1
Datasheet 2

Test Record No. 1

The manufacturer submitted representative production samples of Panel PC, Model MTP-12XX. Model MTP-1201 with CPU (Intel Celeron M600MHZ with 512K L2 Cache) was used for testing purpose and considered representative of the entire series. All tests were conducted by UL-Taiwan Located in Peitou, Taipei City, Taiwan. Test results relate only to the items tested. The following tests were conducted. The results of this investigation, including construction review and testing, indicate that the products evaluated comply with the applicable requirements in the standard for Medical Electrical Equipment, Part 1 : General Requirements for Safety, UL 60601-1, First Edition, including revisions through revision date April 26, 2006, which includes the Second Amendment of IEC60601-1., and Canadian Standard for Medical Electrical Equipment, CAN/CSA C22.2, No. 601.1-M90, including Update No. 2 through revision date January, 2005. Any information and documentation involving UL Mark services are provided on behalf of Underwriters Laboratories Inc. (UL) or any authorized licensee of UL.

The following tests were conducted:

Test	Testing Location/Comments
Power Input (7.1)	UL-Taiwan, located in Peitou, Taipei City, Taiwan
Earthing and Potential Equalization (18F)	UL-Taiwan, located in Peitou, Taipei City, Taiwan
Leakage Current (19)	UL-Taiwan, located in Peitou, Taipei City, Taiwan
Dielectric Voltage Withstand (20.4)	UL-Taiwan, located in Peitou, Taipei City, Taiwan
Enclosure Mechanical Strength (21A, B)	UL-Taiwan, located in Peitou, Taipei City, Taiwan
Rough Handling - Drop (21.6)	UL-Taiwan, located in Peitou, Taipei City, Taiwan
Stability and Transportability (24)	UL-Taiwan, located in Peitou, Taipei City, Taiwan
Suspension System without Safety Device Loading (28.4)	UL-Taiwan, located in Peitou, Taipei City, Taiwan
Temperature (42)	UL-Taiwan, located in Peitou, Taipei City, Taiwan
Humidity Preconditioning Treatment (44.5)	UL-Taiwan, located in Peitou, Taipei City, Taiwan
Overflow, Spillage, Leakage, Cleaning, Sterilization and Disinfection, Harmful Ingress of Liquids (44)	UL-Taiwan, located in Peitou, Taipei City, Taiwan
Abnormal Operation and Fault Conditions (52)	UL-Taiwan, located in Peitou, Taipei City, Taiwan
Mechanical Abuse - Ball Drop (55)	UL-Taiwan, located in Peitou, Taipei City, Taiwan
Mold Stress Relief (55)	UL-Taiwan, located in Peitou, Taipei City, Taiwan
Interruption of Power Supply (49)	UL-Taiwan, located in Peitou, Taipei City, Taiwan
Reversed Battery Connection (56.7)	UL-Taiwan, located in Peitou, Taipei City, Taiwan
Ball Pressure (59.2)	UL-Taiwan, located in Peitou, Taipei City, Taiwan

Test results are valid only for the tested equipment. These tests are considered representative of the products covered by this Test Report. The test methods and results of the above tests have been reviewed and found to be in accordance with the requirements in the Standard(s) referenced at the beginning of this Test Report.

The following tests were waived:

Test	Rationale for Waiving
Marking Durability (6.1)	See table 6.1 for details