RITY120

12” XGA Flat Touch Panel PC Intel® Atom™ Processor with Intel® NM10 Express Chipset

Quick Reference Guide

1st Ed – 25 March 2015

Part No. E2017RT20A0R

FCC Statement

THIS DEVICE COMPLIES WITH PART 15 FCC RULES. OPERATION IS SUBJECT TO THE FOLLOWING TWO CONDITIONS:

(1) THIS DEVICE MAY NOT CAUSE HARMFUL INTERFERENCE.

(2) THIS DEVICE MUST ACCEPT ANY INTERFERENCE RECEIVED INCLUDING INTERFERENCE THAT MAY CAUSE UNDESIRED OPERATION.

THIS EQUIPMENT HAS BEEN TESTED AND FOUND TO COMPLY WITH THE LIMITS FOR A CLASS "A" DIGITAL DEVICE, PURSUANT TO PART 15 OF THE FCC RULES.

THESE LIMITS ARE DESIGNED TO PROVIDE REASONABLE PROTECTION AGAINST HARMFUL INTERFERENCE WHEN THE EQUIPMENT IS OPERATED IN A COMMERCIAL ENVIRONMENT. THIS EQUIPMENT GENERATES, USES, AND CAN RADIATE RADIO FREQUENCY ENERGY AND, IF NOT INSTATLLED AND USED IN ACCORDANCE WITH THE INSTRUCTION MANUAL, MAY CAUSE HARMFUL INTERFERENCE TO RADIO COMMUNICATIONS.

OPERATION OF THIS EQUIPMENT IN A RESIDENTIAL AREA IS LIKELY TO CAUSE HARMFUL INTERFERENCE IN WHICH CASE THE USER WILL BE REQUIRED TO CORRECT THE INTERFERENCE AT HIS OWN EXPENSE.

A Message to the Customer

Avalue Customer Services

Each and every Avalue's product is built to the most exacting specifications to ensure reliable performance in the harsh and demanding conditions typical of industrial environments. Whether your new Avalue device is destined for the laboratory or the factory floor, you can be assured that your product will provide the reliability and ease of operation for which the name Avalue has come to be known.

Your satisfaction is our primary concern. Here is a guide to Avalue's customer services. To ensure you get the full benefit of our services, please follow the instructions below carefully.

Technical Support

We want you to get the maximum performance from your products. So if you run into technical difficulties, we are here to help. For the most frequently asked questions, you can easily find answers in your product documentation. These answers are normally a lot more detailed than the ones we can give over the phone. So please consult the user's manual first.

To receive the latest version of the user's manual; please visit our Web site at:
http://www.avalue.com.tw/

Content

1. Getting Started

1.1 Safety Precautions

Warning!

Always completely disconnect the power cord from your chassis whenever you work with the hardware. Do not make connections while the power is on. Sensitive electronic components can be damaged by sudden power surges. Only experienced electronics personnel should open the PC chassis.

Caution!

Always ground yourself to remove any static charge before touching the CPU card. Modern electronic devices are very sensitive to static electric charges. As a safety precaution, use a grounding wrist strap at all times. Place all electronic components in a static-dissipative surface or static-shielded bag when they are not in the chassis.

1.2 Packing List

- 1 x RITY Series Panel PC
- 1 x Power Adapter
- 1 x Power Cord
- 1 x Stand (option)

If any of the above items is damaged or missing, contact your retailer.

1.3 System Specifications

Panel	
LCD size	12.1", 4:3
Display Type	XGA
Resolution	1024 x 768
Color	16.2M
Luminance	600cd/m²
Contrast ratio	700
Viewing angle	80(H) x 70(V)
Response time	8 ms
Backlight	LED
Touch Type	5 Wires resistive/ PCT
Touch Light Transmission	RES 75 %/ PCT 90%
Touch Controller	Onboard RS232 touch (PenMount)/ USB touch (EETI)
System	
SBC	ACP-CDVPOS
Processor	Intel® Atom™ D2550 Dual-Core 1.8 GHz CPU
System Chipset	Intel® NM10 Express Chipset
I/O Chipset	EC ITE IT8518E
System Memory	1 x 204-Pin DDR3 1066MHz SO-DIMM up to 4 GB
Watchdog Timer	H/W Reset: 1sec.~255min. and 1sec. or 1min./step
Expansion & Storage	
Expansion	1 x Mini PCIe Supports mSATA
Storage	1 x 2.5” Drive Bay 1 x mSATA
I/O	
USB	6 x USB 2.0
COM Port	2 x RS-232/422/485 (BIOS) 1 x RS-232
Display	
Chipset	Intel® Cedarview Integrated Graphics Supports dual display
Resolution	LVDS: Max. resolution 1024x768 @ 60Hz VGA: Max. resolution 1024x768 @ 60Hz

Audio	
Chipset	Realtek ALC892 supports 2-CH
Speaker Output	2 x 2W
Ethernet	
Chipset	2 x Realtek 8111E
Ethernet Interface	10/100/1000 Base-Tx GbE compatible
LAN Port	1 x RJ-45
Power Requirement	
Power Connector	minidin 4P for DC in w/ lock type
Power Requirement	+19V ~ +24V
Power Type	AT/ATX (ATX is default setting)
Adapter	Input: 100 ~ 240Vac/ 50 ~ 60Hz Output: 90W Adapter (24V @ 3.75A Adapter) AC-DC Adapter
Mechanical & Environmental	
Power Connector	Fanless
Construction - Front	Black Coverlens
Construction - Rear	Black
Dimension	322 x 250 x 47 mm
Weight	5 /with Stand Kgs
Operating Temperature	0°C ~ 35°C (32°F ~ 95°F)
Storage Temperature	0°C ~ 60°C (32°F ~ 140°F)
Operating Humidity	0% ~ 90% Relative Humidity, Non-condensing
Vibration Test	With SSD/mSATA : 1.5Grms, IEC 60068-2-64, Random, 5 ~ 500Hz, 30min/axis
Shock Test	With SSD : 10Grms, IEC 60068-2-27, Half Sine, 11ms
Certifications & Software Support	
Certification Information	CE FCC Class B VCCI

OS Information	POS Ready, Win 7, Win XP

Note: Specifications are subject to change without notice.

1.4 System Overview

1.4.1 Right View

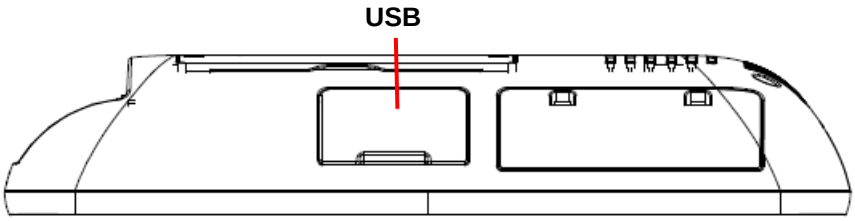

1.4.2 Bottom View

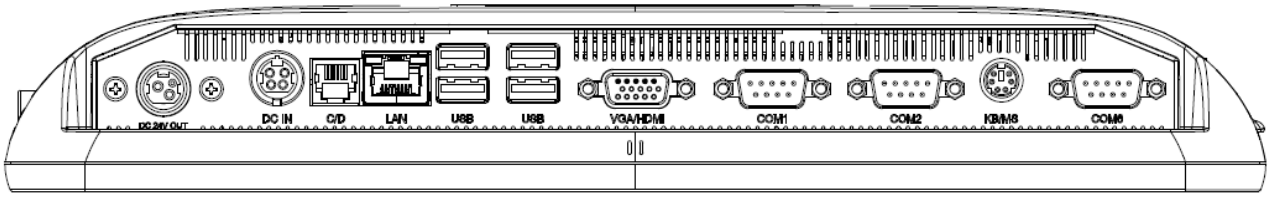

Connectors		
Label	**Function**	**Note**
COM1/2/6	External Serial Port 1/2 connector (For RS-232/422/485) External Serial Port 6 connector (For RS-232)	DB-9 male connector
VGA/HDMI	VGA connector HDMI connector	
C/D	Cash Drawer connector	
USB	6 x USB 2.0 connector	
LAN	2 x RJ-45 Ethernet connector	
DC-IN	DC Power-in connector	
DC 24V OUT	DC Power-out connector	
KB/MS	Keyboard & Mouse connector	

1.5 System Dimensions

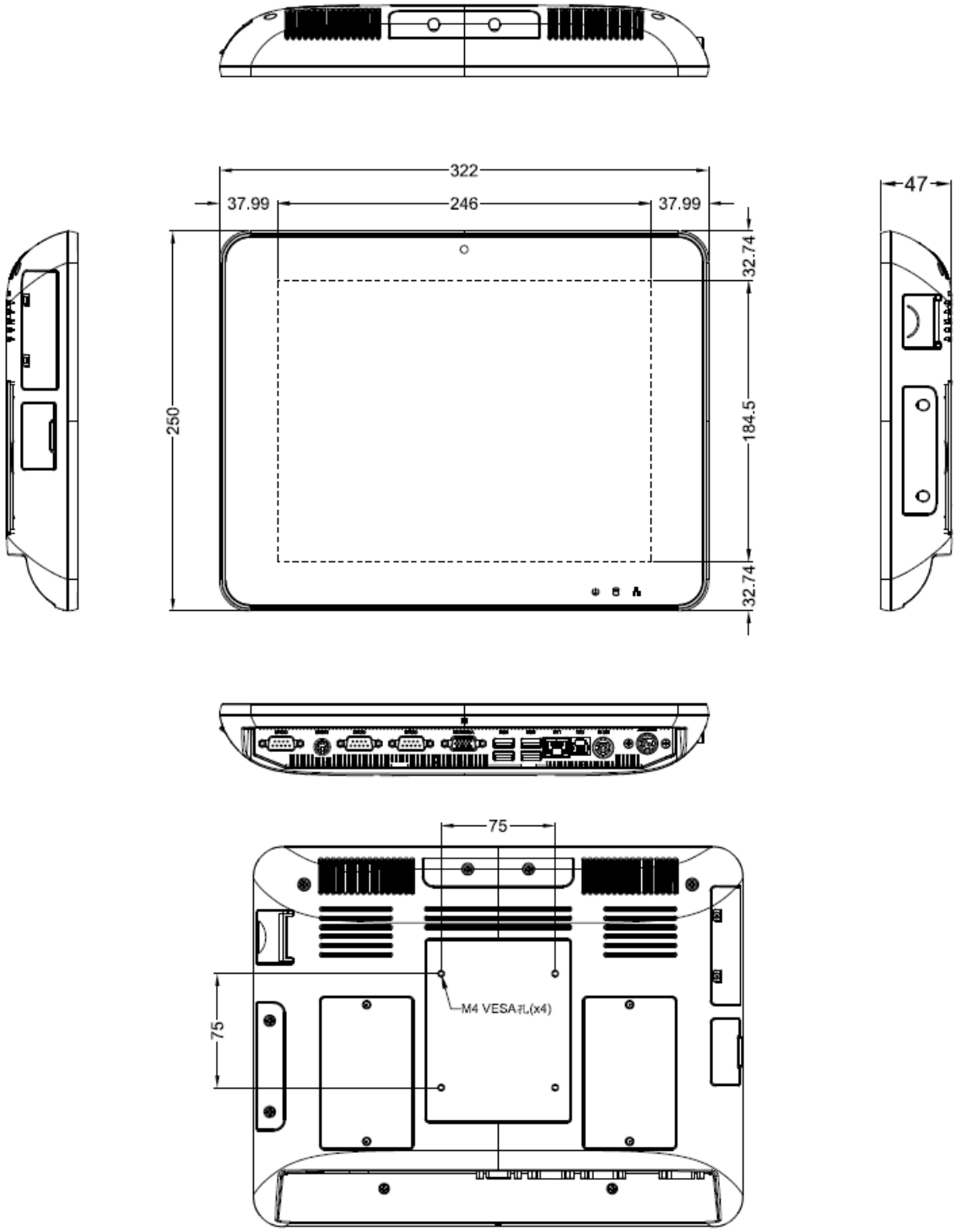

(Unit: mm)

2. Hardware Configuration

Note: If you need more information, please visit our website:

http://www.avalue.com.tw

2.1 RITY120 connector mapping

2.1.1 External Serial Port 1 connector (COM1)

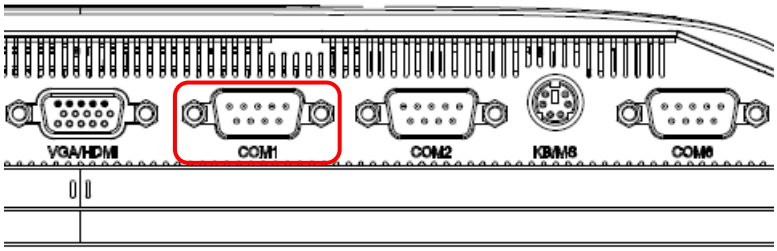

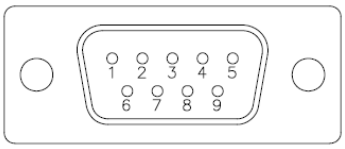

In RS-232 Mode

Signal	PIN	PIN	Signal
DCDA#	1	6	DSRA#
RXDA	2	7	RTSA#
TXDA	3	8	CTSA#
DTRA#	4	9	RIA#
GND	5		

In RS-422 Mode

Signal	PIN	PIN	Signal
TxD1-	1	6	NC
TxD1+	2	7	NC
RxD1+	3	8	NC
RxD1-	4	9	NC
GND	5		

In RS-485 Mode

Signal	PIN	PIN	Signal
DATA1-	1	6	NC
DATA1+	2	7	NC
NC	3	8	NC
NC	4	9	NC
GND	5		

2.1.2 External Serial Port 2 connector (COM2)

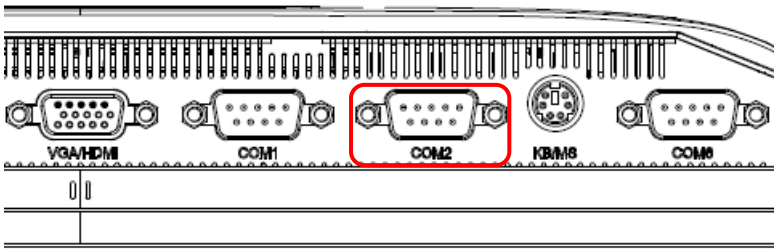

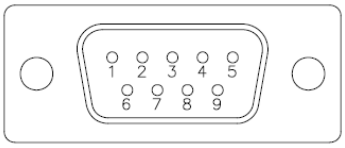

In RS-232 Mode

Signal	PIN	PIN	Signal
DCDB#	1	6	DSRB#
RXDB	2	7	RTSB#
TXDB	3	8	CTSB#
DTRB#	4	9	RIB#
GND	5		

In RS-422 Mode

Signal	PIN	PIN	Signal
TxD1-	1	6	NC
TxD1+	2	7	NC
RxD1+	3	8	NC
RxD1-	4	9	NC
GND	5		

In RS-485 Mode

Signal	PIN	PIN	Signal
DATA1-	1	6	NC
DATA1+	2	7	NC
NC	3	8	NC
NC	4	9	NC
GND	5		

2.1.3 External Serial Port 6 connector (COM6)

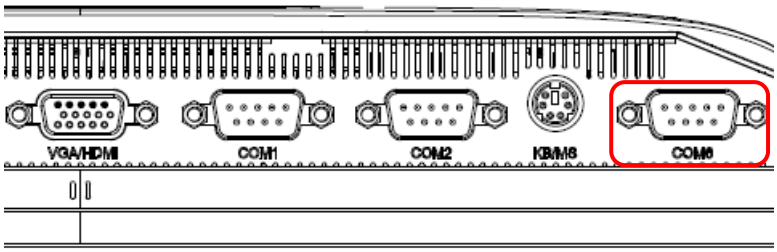

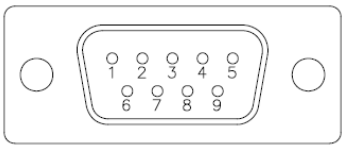

Signal	PIN	PIN	Signal
DCD	1	6	DSR
RXD	2	7	RTS
TXD	3	8	CTS
DTR	4	9	RI
GND	5		

2.1.4 VGA/HDMI connector (VGA/HDMI)

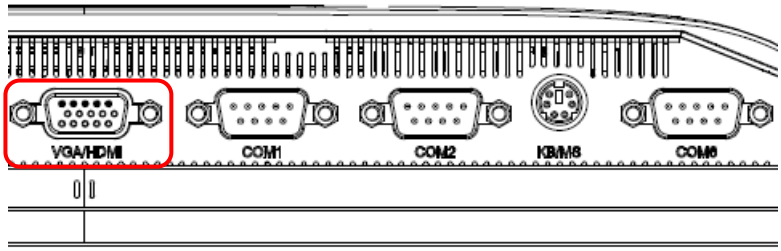

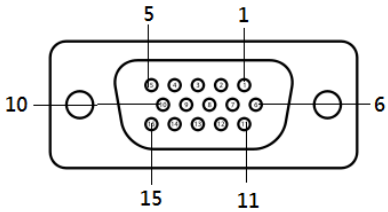

PIN	Signal	PIN	Signal	PIN	Signal
1	R	6	GND	11	+12V
2	G	7	GND	12	DATA
3	B	8	GND	13	HSYNC
4	+12V	9	+5V	14	VSYNC
5	GND	10	GND	15	CLK

2.2 Installing Memory, Mini PCI-e device & Hard Disk

Step 1. Memory Installation: Unfasten 2 screws from the case. Then take off the top chassis.

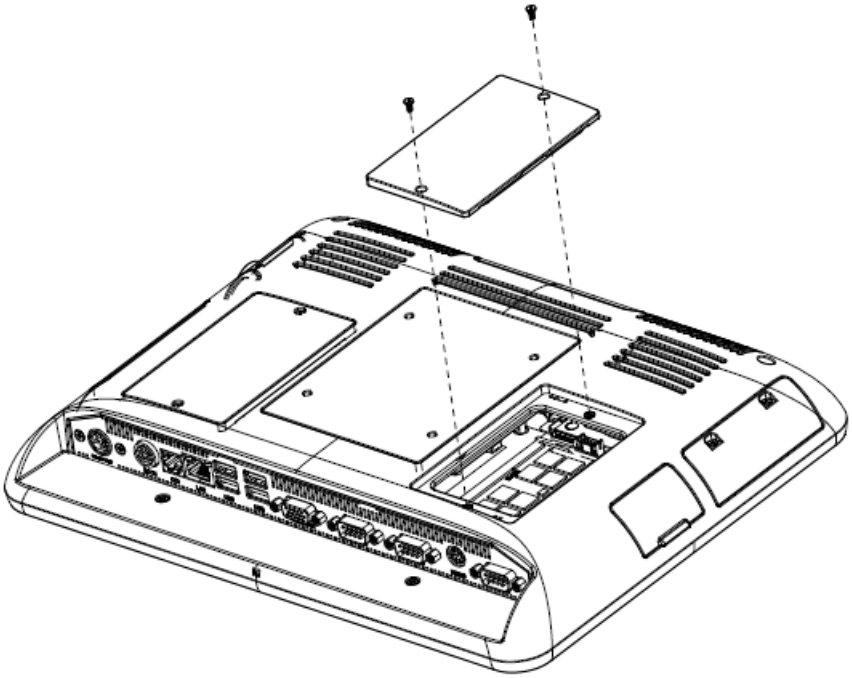

Step 2. Insert the SODIMM into the memory socket.

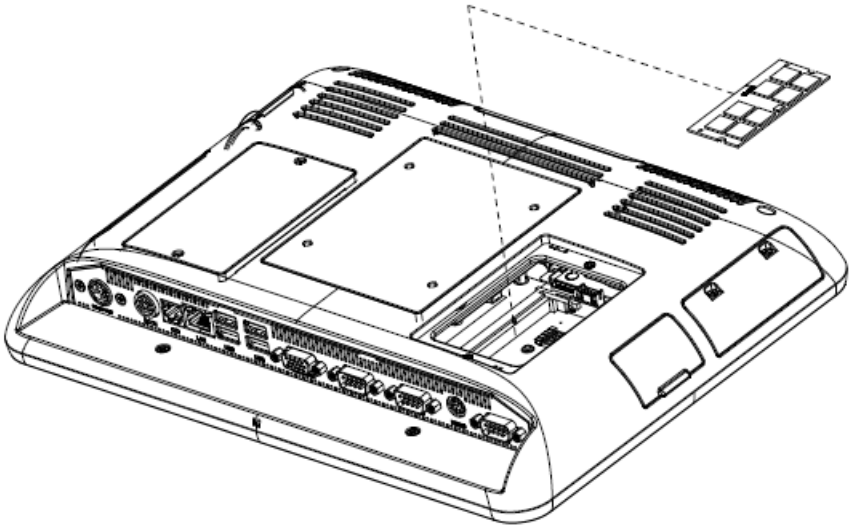

Step 3. Mini PCI-e device Installation: Unfasten 2 screws from the case. Then take off the top chassis.

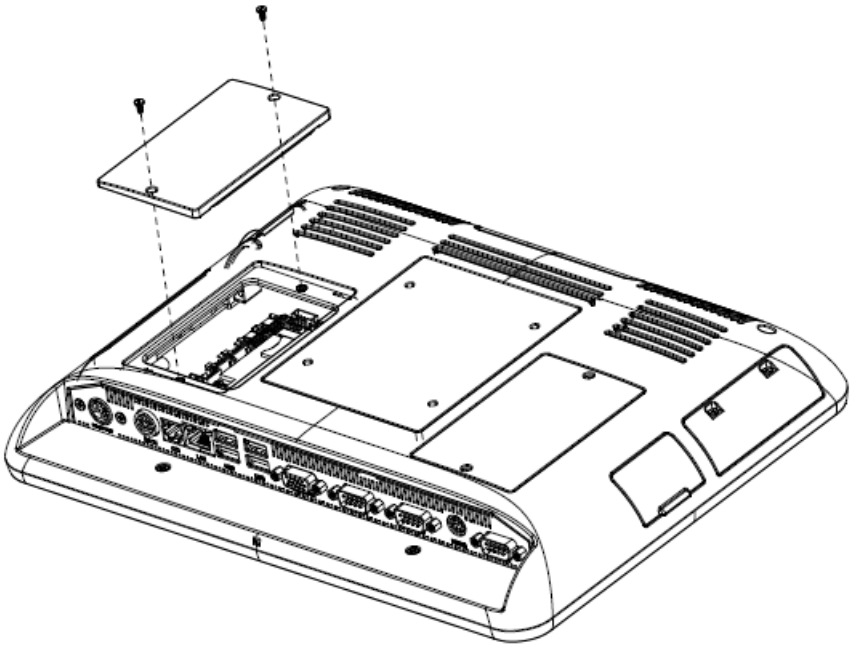

Step 4. Insert the Mini PCI-e device into the socket and fasten 2 screws.

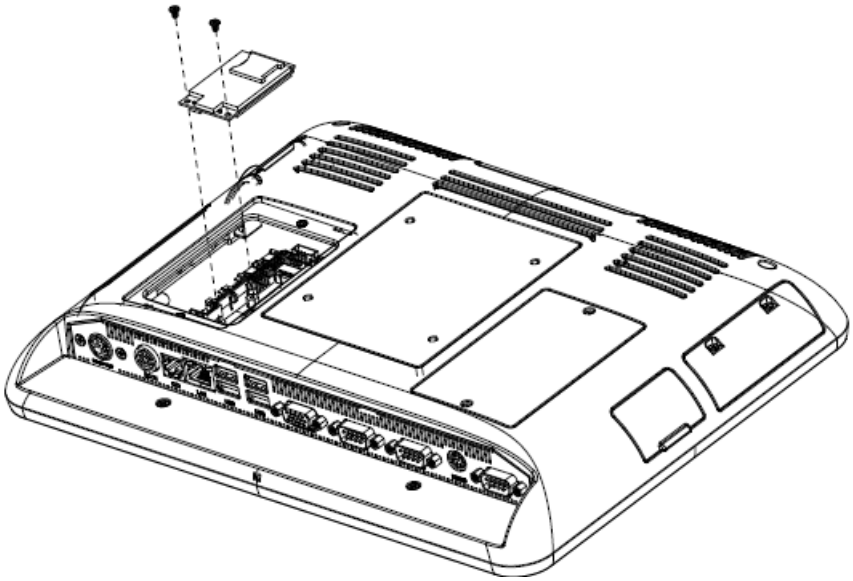

Step 5. HDD Installation: Unfasten 2 screws from the case. Then take off the top chassis.

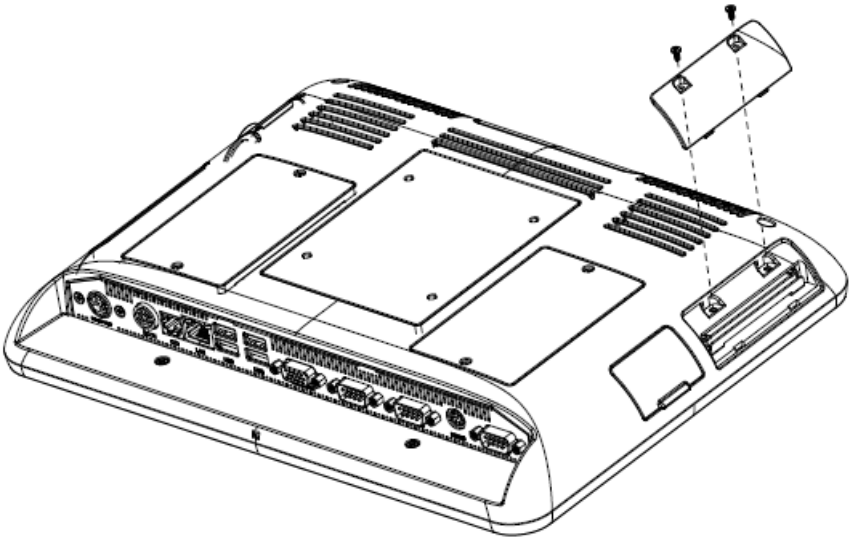

Step 6. Insert the HDD into the bracket and fasten 4 screws.

Step 7. Re-assemble your system back through previous steps to complete the installation.